YKK AP AMERICA, Inc.

YUW 750 XTH CAPTURED & SSG UNITIZED WALL SYSTEM (HVHZ) (S.M.I.)

INSTALLATION NOTES:

1. THE NUMBER OF INSTALLATION ANCHORS DEPICTED IS THE MINIMUM NUMBER OF ANCHORS TO BE USED FOR PRODUCT INSTALLATION.

2. INSTALL INDIVIDUAL ANCHORS WITHIN A TOLERANCE OF +/-½ INCH OF THE DEPICTED LOCATION AS SPECIFIED. TOLERANCES ARE NOT CONSIDERED CUMULATIVE FROM ONE LOCATION TO THE NEXT.

3. MINIMUM EMBEDMENT AND EDGE DISTANCE EXCLUDE WALL FINISHES, INCLUDING BUT NOT LIMITED TO STUCCO, FOAM, BRICK VENEER, AND SIDING.

4. INSTALLATION ANCHORS AND ASSOCIATED HARDWARE MUST BE MADE OF CORROSION RESISTANT MATERIAL OR HAVE A CORROSION RESISTANT COATING.

   - FASTENERS USED WITHIN 3,000 FEET OF A SALTWATER COASTLINE AND INSTALLED IN ENCLOSED SPACES SHALL BE GALVANIZED IN ACCORDANCE WITH SECTION 1711.1.1 (E.G., ASTM A153 CLASS D, ASTM A641 CLASS 3S, OR EQUIVALENT CORROSION RESISTANCE).

   - CONNECTORS AND METAL PLATES USED WITHIN 3,000 FEET OF A SALTWATER COASTLINE SHALL BE STANDARD GALVANIZED IN ACCORDANCE WITH SECTION 1711.1.2 (E.G., ASTM A653 G90, ASTM A123, OR PROTECTIVE COATING PER TPI 1).

5. INSTALLATION ANCHORS SHALL BE INSTALLED IN ACCORDANCE WITH ANCHOR MANUFACTURER'S INSTALLATION INSTRUCTIONS, AND ANCHORS SHALL NOT BE USED IN SUBSTRATES WITH STRENGTHS LESS THAN THE MINIMUM STRENGTH SPECIFIED BY THE ANCHOR MANUFACTURER.

6. INSTALLATION ANCHOR CAPACITIES FOR PRODUCTS HEREIN ARE BASED ON SUBSTRATE MATERIALS WITH PROPERTIES AS SPECIFIED IN ANCHOR OPTION TABLES. PLEASE REFER TO SHEET 16 FOR T, F, & CORNER CLIP FOR ANCHOR SELECTION & SUBSTRATE REQUIREMENTS. PLEASE REFER TO SHEET 17 FOR L-ANCHOR, DEAD LOAD ANCHOR, FOR ANCHOR SELECTION & SUBSTRATE REQUIREMENTS.

GENERAL NOTES:

1. THE PRODUCT SHOWN HEREIN IS DESIGNED AND MANUFACTURED TO COMPLY WITH THE CURRENT FLORIDA BUILDING CODE (FBC), INCLUDING HVHZ, AND HAS BEEN EVALUATED ACCORDING TO THE FOLLOWING:
   - TAS 201-94
   - TAS 202-94
   - TAS 203-94
   - AAMA 501-25
   - ASTM E1886-19
   - ASTM E1996-23

2. ADEQUACY OF THE EXISTING STRUCTURAL CONCRETE/MASONRY AND STEEL AS A MAIN WIND FORCE RESISTING SYSTEM CAPABLE OF WITHSTANDING AND TRANSFERRING APPLIED PRODUCT LOADS TO THE FOUNDATION IS THE RESPONSIBILITY OF THE ENGINEER OR ARCHITECT OF RECORD FOR THE PROJECT OF INSTALLATION.

3. STEEL (WHEN USED) SHALL BE DESIGNED AND ANCHORED TO PROPERLY TRANSFER ALL LOADS TO THE STRUCTURE. STEEL DESIGN AND INSTALLATION IS THE RESPONSIBILITY OF THE ENGINEER OR ARCHITECT OF RECORD FOR THE PROJECT OF INSTALLATION.

4. THE INSTALLATION DETAILS DESCRIBED HEREIN ARE GENERIC AND MAY NOT REFLECT ACTUAL CONDITIONS FOR A SPECIFIC SITE. IF SITE CONDITIONS CAUSE INSTALLATION TO DEVIATE FROM THE REQUIREMENTS DETAILED HEREIN, A LICENSED ENGINEER OR ARCHITECT SHALL PREPARE SITE SPECIFIC DOCUMENTS FOR USE WITH THIS DOCUMENT IN ACCORDANCE WITH THE AUTHORITY HAVING JURISDICTION (AHJ).

5. APPROVED IMPACT PROTECTIVE SYSTEM **IS NOT REQUIRED** ON THIS PRODUCT IN AREAS REQUIRING IMPACT RESISTANCE ABOVE 30 FT.

6. APPROVED IMPACT PROTECTIVE SYSTEM **IS REQUIRED** ON THIS PRODUCT IN AREAS REQUIRING IMPACT RESISTANCE AT 30 FT AND BELOW.

7. FRAME MATERIAL: 6063-T5 & 6063-T6 ALUMINUM.

8. ALL STRUCTURAL MATERIALS & DISSIMILIAR METALS SHALL BE PROTECTED, TREATED, PAINTED, COATED, AND/OR ISOLATED AS REQUIRED IN THE APPLICABLE SECTIONS OF THE CURRENT FLORIDA BUILDING CODE AND REFERENCED DESIGN SPECIFICATIONS.

8. GLASS SHALL MEETS THE REQUIREMENTS OF ASTM E1300 GLASS CHARTS.

TABLE OF CONTENTS

SHEET	SHEET DESCRIPTION
1	INSTALLATION & GENERAL NOTES
2	ELEVATION
3	VERTICAL SECTIONS - SILL
4	VERTICAL SECTIONS - HEAD
5	VERTICAL SECTIONS - HORIZONTALS
6	HORIZONTAL SECTIONS - REINF. VERTICALS
7	HORIZONTAL SECTIONS - UNREINFORCED VERTICALS
8	HORIZONTAL SECTIONS - OUTSIDE 90 CORNER
9	HORIZONTAL SECTIONS - INSIDE 90 CORNER
10	GLASS TYPE DESIGN PRESSURE TABLE
11	SINGLE SPAN DP TABLES: REINFORCED VERTICALS
12	SINGLE SPAN DP TABLES: UNREINFORCED VERTICALS
13	MULTI SPAN DP TABLES: REINFORCED VERTICALS
14	T & F CLIP ANCHOR DETAILS
15	IS & OS CORNER T-CLIP ANCHOR DETAILS
16	T, F, & CORNER CLIP ANCHOR TABLES
17	L-ANCHOR DETAIL - DEAD LOAD ANCHOR TABLE
18	HORIZONTAL SECTION - L-ANCHOR INT. VERTICAL & JAMBS
19	HORIZONTAL SECTION - L-ANCHOR INSIDE 90 CORNER
20	HORIZONTAL SECTION - L-ANCHOR OUTSIDE 90 CORNER
21	BILL OF MATERIALS
22	COMPONENTS (1)
23	COMPONENTS (2)
24	COMPONENTS (3)
25	COMPONENTS (4)
26	COMPONENTS (5)

MISSILE IMPACT RATING
SMALL MISSILE IMPACT

YKK AP AMERICA, Inc.
101 MARIETTA STREET NW, SUITE 2100
MIAMI, FL 33132
PH: (478)277-1955 FAX: (678)838-6001

TITLE: YUW 750 XTH UNITIZED WALL SYSTEM (HVHZ) (S.M.I.) INSTALLATION & GENERAL NOTES

PREPARED BY: BUILDING DROPS, INC.
1900 NE MIAMI COURT, STE. 2-15
MIAMI, FL 33132
PH: (954)399-8478
FAX: (954)744.4738
WEB: www.buildingdrops.com

REMARKS	BY	DATE
2026 FBC UPDATE	SH	07.24.26

THE INSTALLATION DETAILS DESCRIBED HEREIN ARE GENERIC AND MAY NOT REFLECT ACTUAL CONDITIONS FOR A SPECIFIC SITE. IF SITE CONDITIONS CAUSE INSTALLATION TO DEVIATE FROM THE REQUIREMENTS DETAILED HEREIN, A LICENSED ENGINEER OR ARCHITECT SHALL PREPARE SITE SPECIFIC DOCUMENTS FOR USE WITH THIS DOCUMENT.

Digitally signed by Hermes F. Norero, P.E.
Reason: I am approving this document
Date: 2026.08.01 16:07:46 -04'00'

HERMES F. NORERO
LICENSE
No. 73778
STATE OF FLORIDA
PROFESSIONAL ENGINEER

HERMES F. NORERO, P.E.
FLORIDA P.E. No. 73778
BUILDING DROPS, INC
1900 NE MIAMI COURT, STE. 2-15
MIAMI, FL 33132
FBPE CERT. OF AUTHORIZATION No. 29578

FL #: FL16668

DATE: 10.30.13

DWG. BY: MSS | CHK. BY: HFN

SCALE: NTS

DWG. #: YKK023

SHEET: 1 OF 26 | REV. A

7/24/2026 12:37 PM
c:\users\sebastianherreros\desktop\ykk 2026 cc\fl16668\ykk023.dwg

7/24/2026 12:37 PM

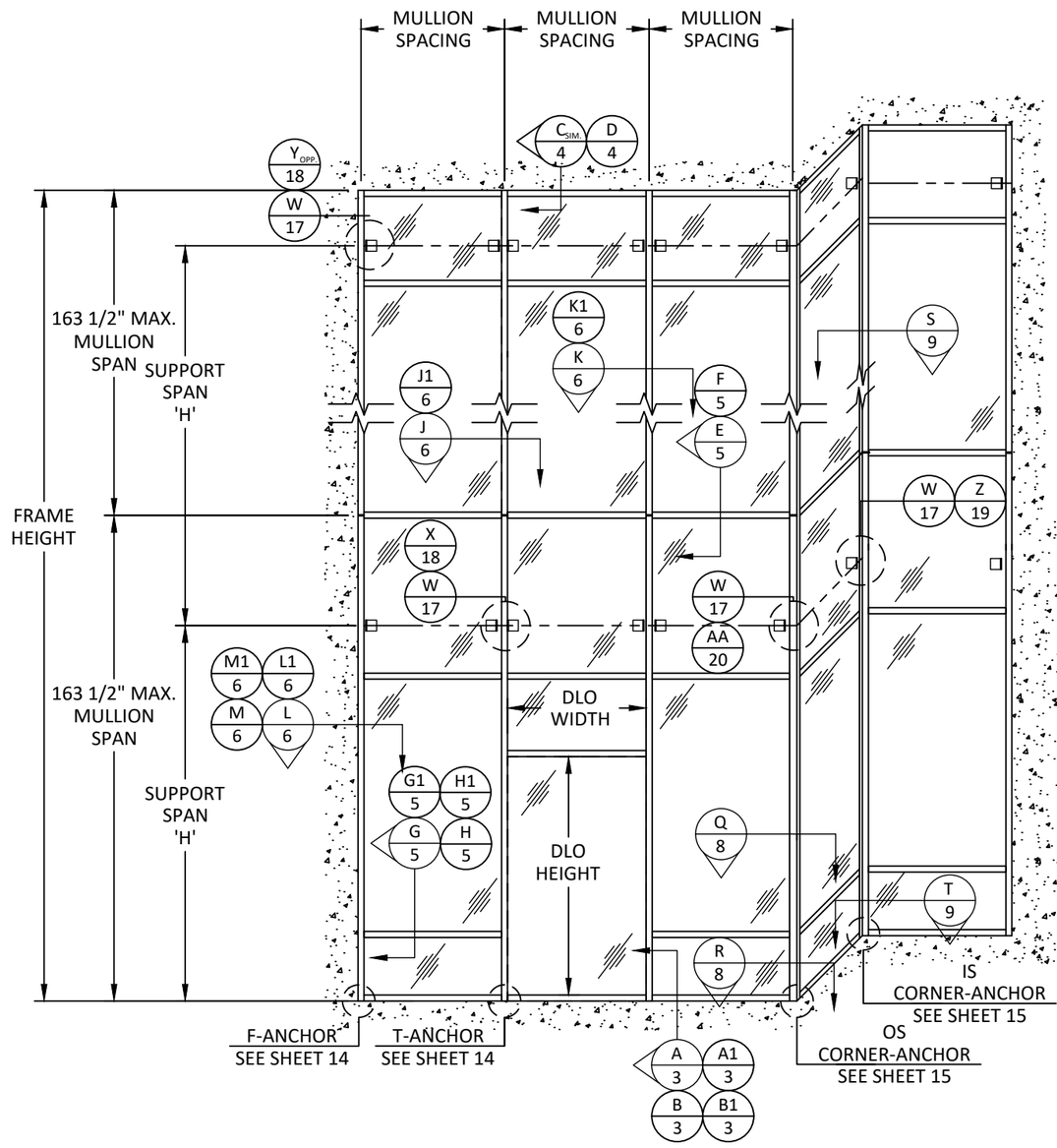

ELEVATION SHOWN IS FOR DIAGRAMMATIC PURPOSES ONLY. VARIOUS CONFIGURATIONS ARE POSSIBLE USING THIS APPROVAL AND DESIGN PRESSURE CHARTS WITHIN.

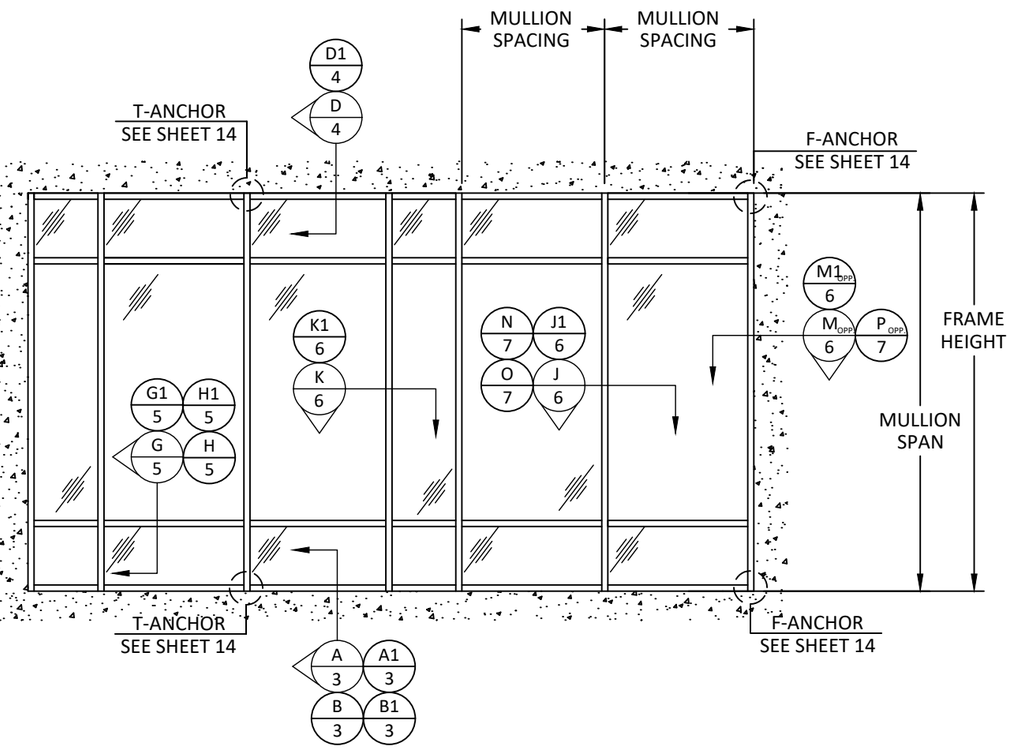

ELEVATION MULTI-SPAN

ELEVATION SINGLE-SPAN TYP.

YKK AP AMERICA, Inc.
101 MARIETTA STREET NW, SUITE 2100
MIAMI, FL 33132
PH: (478)277-1955 FAX: (678)838-6001

TITLE: YUW 750 XTH UNITIZED WALL SYSTEM (HVHZ) (S.M.I.)

ELEVATION

PREPARED BY:
BUILDING DROPS, INC.
1900 NE MIAMI COURT, STE. 2-15
MIAMI, FL 33132
PH: (954)399-8478
FAX: (954)744.4738
WEB: www.buildingdrops.com

REMARKS	BY	DATE
2026 FBC UPDATE	SH	07.24.26

THE INSTALLATION DETAILS DESCRIBED HEREIN ARE GENERIC AND MAY NOT REFLECT ACTUAL CONDITIONS FOR A SPECIFIC SITE. IF SITE CONDITIONS CAUSE INSTALLATION TO DEVIATE FROM THE REQUIREMENTS DETAILED HEREIN, A LICENSED ENGINEER OR ARCHITECT SHALL PREPARE SITE SPECIFIC DOCUMENTS FOR USE WITH THIS DOCUMENT.

HERMES F. NORERO LICENSE No. 73778 STATE OF FLORIDA PROFESSIONAL ENGINEER

HERMES F. NORERO, P.E.
FLORIDA P.E. No. 73778
BUILDING DROPS, INC
1900 NE MIAMI COURT, STE. 2-15
MIAMI, FL 33132
FBPE CERT. OF AUTHORIZATION No. 29578

FL #: FL16668

DATE: 10.30.13

DWG. BY: MSS

CHK. BY: HFN

SCALE: NTS

DWG. #: YKK023

SHEET: 2 OF 26

REV. A

c:\users\sebastianherreros\desktop\ykk 2026 cc\fl16668\ykk023.dwg

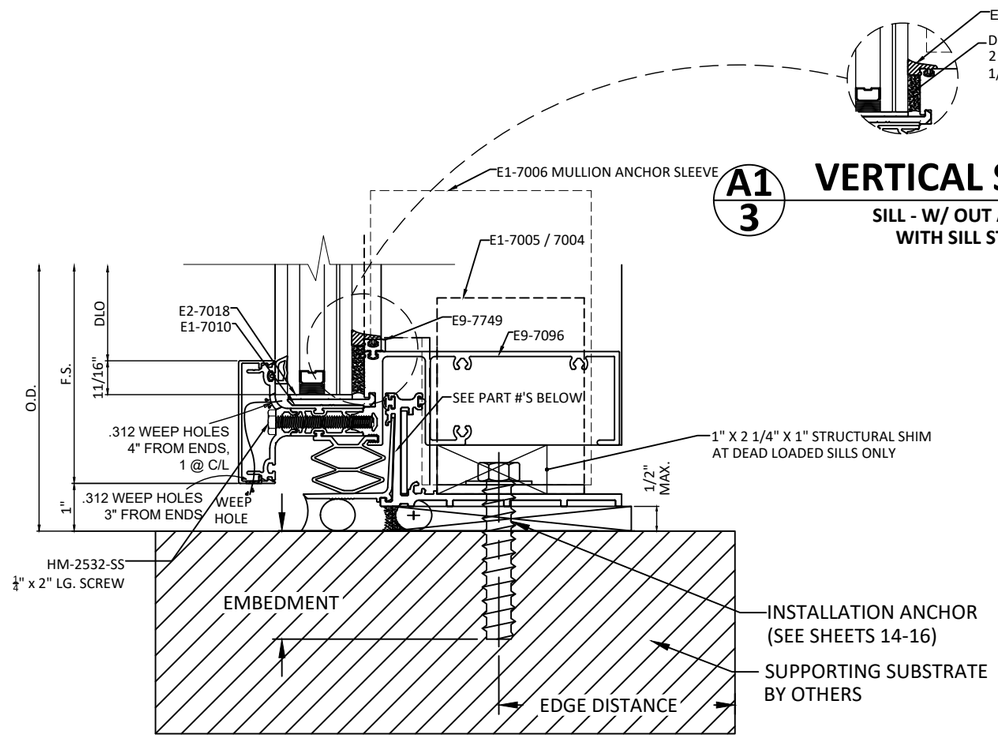

A1/3 VERTICAL SECTION

SILL - W/ OUT ADAPTOR WITH SILL STARTER

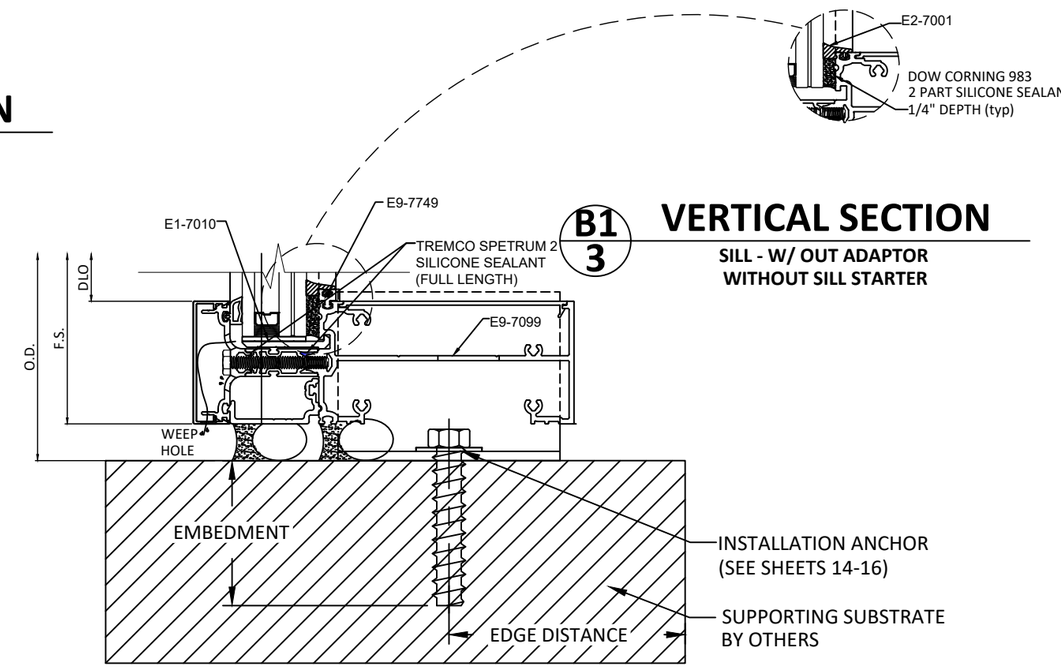

B1/3 VERTICAL SECTION

SILL - W/ OUT ADAPTOR WITHOUT SILL STARTER

A/3 VERTICAL SECTION

SILL - W/ ADAPTOR WITH SILL STARTER

B/3 VERTICAL SECTION

SILL - W/ ADAPTOR WITHOUT SILL STARTER

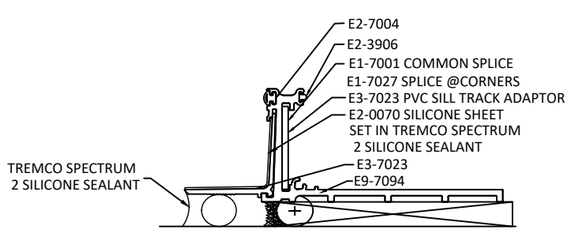

SPLICE & SEALING DETAILS

SILL STARTER

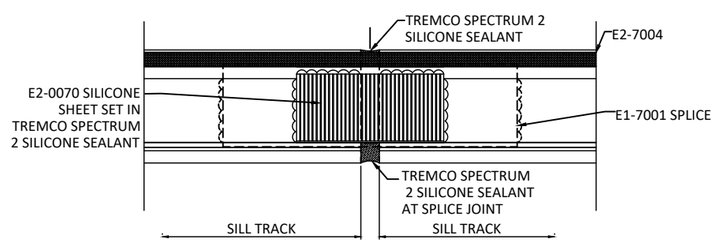

SPLICE & SEALING DETAILS

SILL STARTER

NOTE:
1. REFER TO SHEET 16 FOR T, F, & CORNER CLIP ANCHOR SELECTION & SUBSTRATE REQUIREMENTS.
2. MEMBERS SHOWN HEREIN WHICH DO NOT UTILIZE GLAZING BITE ADAPTOR, E9-7749, ARE LIMITED TO +/- 55 PSF DESIGN PRESSURE.
3. SEE SHEET 10 FOR GLAZING OPTIONS.

YKK AP AMERICA, Inc.
101 MARIETTA STREET NW, SUITE 2100
MIAMI, FL 33132
PH: (478)277-1955 FAX: (678)838-6001

TITLE: YUW 750 XTH UNITIZED WALL SYSTEM (HVHZ) (S.M.I.)
VERTICAL SECTIONS
SILL

PREPARED BY:
BUILDING DROPS, INC.
1900 NE MIAMI COURT, STE. 2-15
MIAMI, FL 33132
PH: (954)399-8478
FAX: (954)744.4738
WEB: www.buildingdrops.com

REMARKS	BY	DATE
2026 FBC UPDATE	SH	07.24.26

THE INSTALLATION DETAILS DESCRIBED HEREIN ARE GENERIC AND MAY NOT REFLECT ACTUAL CONDITIONS FOR A SPECIFIC SITE. IF SITE CONDITIONS CAUSE INSTALLATION TO DEVIATE FROM THE REQUIREMENTS DETAILED HEREIN, A LICENSED ENGINEER OR ARCHITECT SHALL PREPARE SITE SPECIFIC DOCUMENTS FOR USE WITH THIS DOCUMENT.

HERMES F. NORERO
LICENSE
No. 73778
STATE OF
FLORIDA
PROFESSIONAL ENGINEER

HERMES F. NORERO, P.E.
FLORIDA P.E. No. 73778
BUILDING DROPS, INC
1900 NE MIAMI COURT, STE. 2-15
MIAMI, FL 33132
FBPE CERT. OF AUTHORIZATION No. 29578

FL #: FL16668

DATE: 10.30.13

DWG. BY: MSS | CHK. BY: HFN

SCALE: NTS

DWG. #: YKK023

SHEET: 3 | REV. A

7/24/2026 12:37 PM
c:\users\sebastianherreros\desktop\ykk 2026 cc\f16668\ykk023.dwg

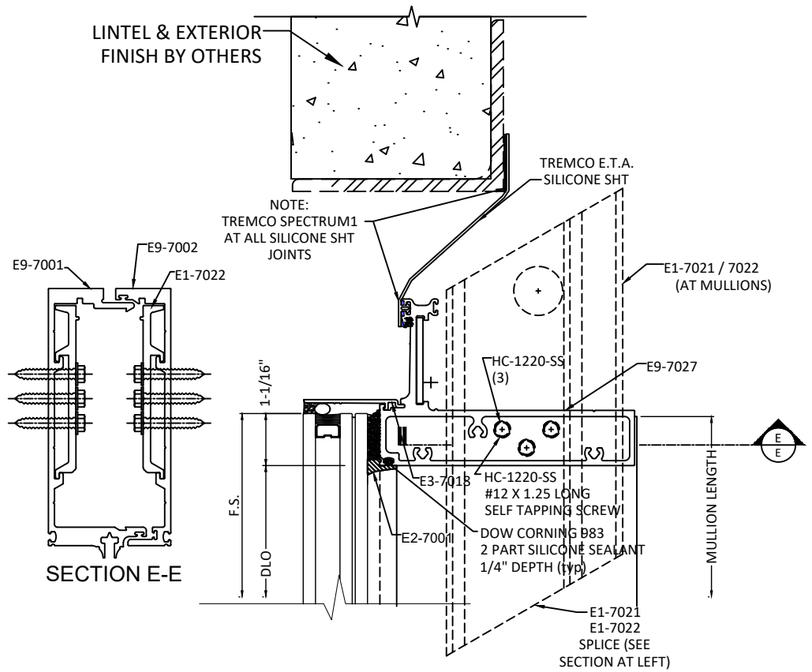

C/4 VERTICAL SECTION

HEAD - W/ E.T.A.
CURTAIN WALL SYSTEM

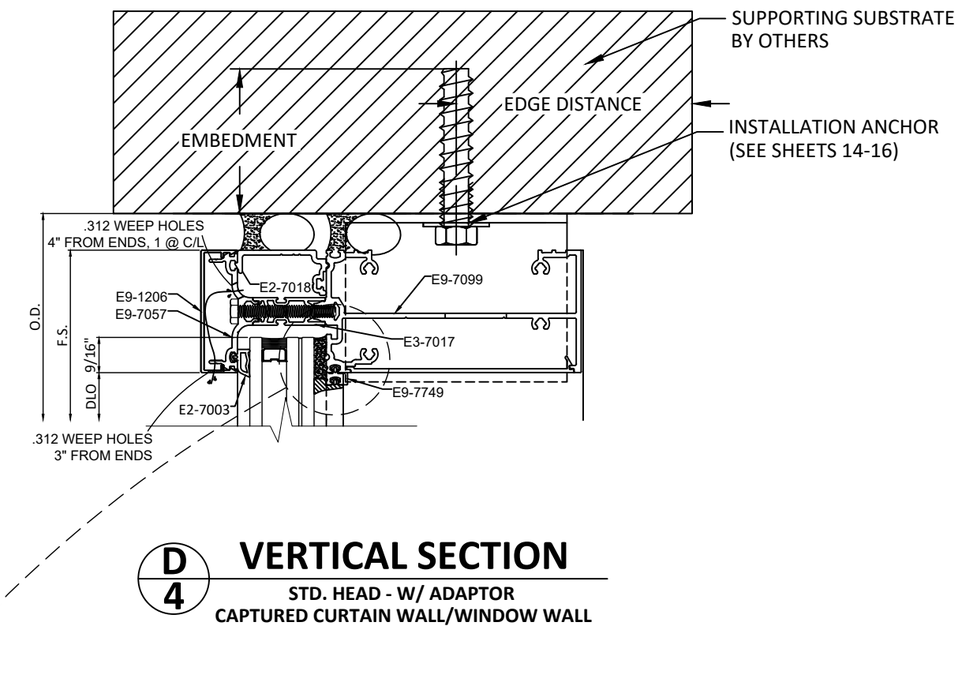

D/4 VERTICAL SECTION

STD. HEAD - W/ ADAPTOR
CAPTURED CURTAIN WALL/WINDOW WALL

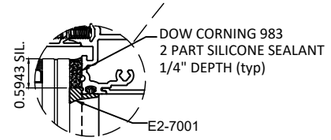

D1/4 VERTICAL SECTION

STD. HEAD - W/ OUT ADAPTOR
CAPTURED CURTAIN WALL/WINDOW WALL

NOTE:
1. REFER TO SHEET 16 FOR T, F, & CORNER CLIP ANCHOR SELECTION & SUBSTRATE REQUIREMENTS.
2. MEMBERS SHOWN HEREIN WHICH DO NOT UTILIZE GLAZING BITE ADAPTOR, E9-7749, ARE LIMITED TO +/- 55 PSF DESIGN PRESSURE.
3. SEE SHEET 10 FOR GLAZING OPTIONS.

YKK AP AMERICA, Inc.
101 MARIETTA STREET NW, SUITE 2100
MIAMI, FL 33132
PH: (478)277-1955 FAX: (678)838-6001

TITLE:
YUW 750 XTH UNITIZED WALL SYSTEM (HVHZ) (S.M.I.)
VERTICAL SECTIONS
HEAD

PREPARED BY:
BUILDING DROPS, INC.
1900 NE MIAMI COURT, STE. 2-15
MIAMI, FL 33132
PH: (954)399-8478
FAX: (954)744.4738
WEB: www.buildingdrops.com

REMARKS	BY	DATE
2026 FBC UPDATE	SH	07.24.26

THE INSTALLATION DETAILS DESCRIBED HEREIN ARE GENERIC AND MAY NOT REFLECT ACTUAL CONDITIONS FOR A SPECIFIC SITE. IF SITE CONDITIONS CAUSE INSTALLATION TO DEVIATE FROM THE REQUIREMENTS DETAILED HEREIN, A LICENSED ENGINEER OR ARCHITECT SHALL PREPARE SITE SPECIFIC DOCUMENTS FOR USE WITH THIS DOCUMENT.

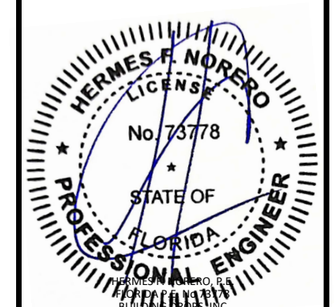

HERMES F. NORERO, P.E.
FLORIDA P.E. No. 73778
BUILDING DROPS, INC
1900 NE MIAMI COURT, STE. 2-15
MIAMI, FL 33132
FBPE CERT. OF AUTHORIZATION No. 29578

FL #: FL16668

DATE: 10.30.13

DWG. BY: MSS | CHK. BY: HFN

SCALE: NTS

DWG. #: YKK023

SHEET: 4 | REV. A

7/24/2026 12:37 PM
c:\users\sebastianherreros\desktop\ykk 2026 cc\fl16668\ykk023.dwg

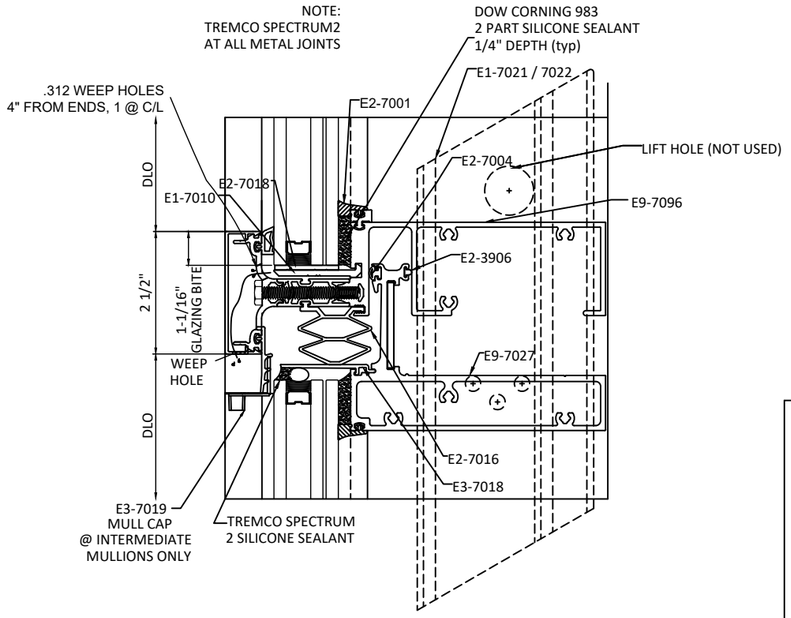

E/5 VERTICAL SECTION

INTERMEDIATE SILL STARTER & SPLICE
PRESSURE PLATE (CAPTURED)

NOTE:
1. MEMBERS SHOWN HEREIN WHICH DO NOT UTILIZE GLAZING BITE ADAPTOR, E9-7749, ARE LIMITED TO +/- 55 PSF DESIGN PRESSURE. U.N.O.
2. SEE SHEET 10 FOR GLAZING OPTIONS.
3. SEE TABLE BELOW FOR PERFORMANCE RATINGS OF HORIZONTAL TRANSOM ASSEMBLIES.
4. STRUCTURALLY GLAZED (SSG) UNITS WITH ADAPTOR, E9-7749, MAY USE INTERIOR GASKET, E2-7001, IN LIEU OF GLAZING TAPE, E2-0724, SUCH THAT SILICONE BITE IS INCREASED FROM 0.8430" TO 0.8743".

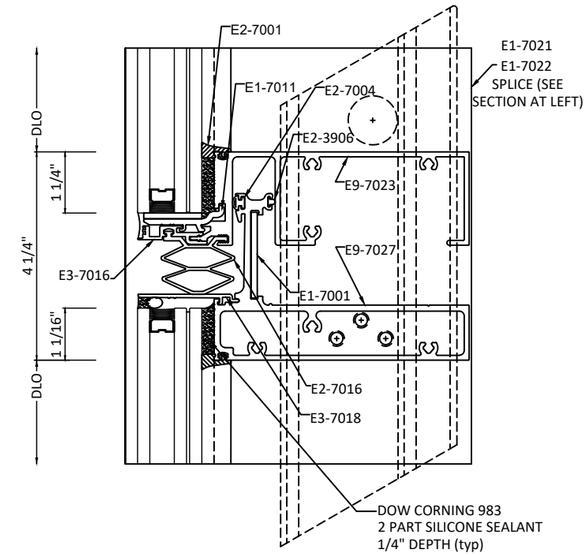

F/5 VERTICAL SECTION

INTERMEDIATE SILL STARTER & SPLICE
SSG

ADAPTOR (E9-7749)	MAX. SPAN	DESIGN PRESSURE
WITH	57 3/4"	+/- 80 PSF
WITHOUT	57 3/4"	+/- 55 PSF

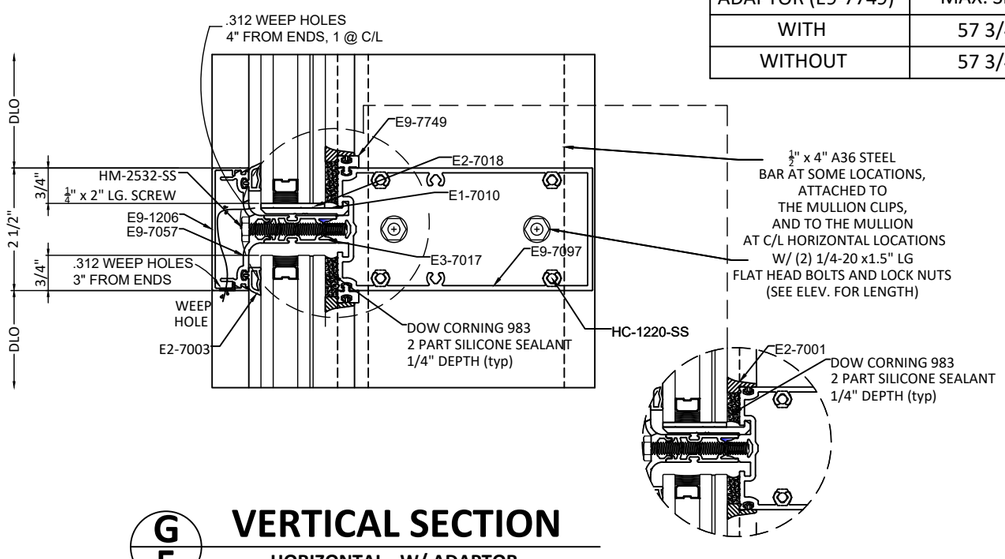

G/5 VERTICAL SECTION

HORIZONTAL - W/ ADAPTOR
PRESSURE PLATE (CAPTURED)

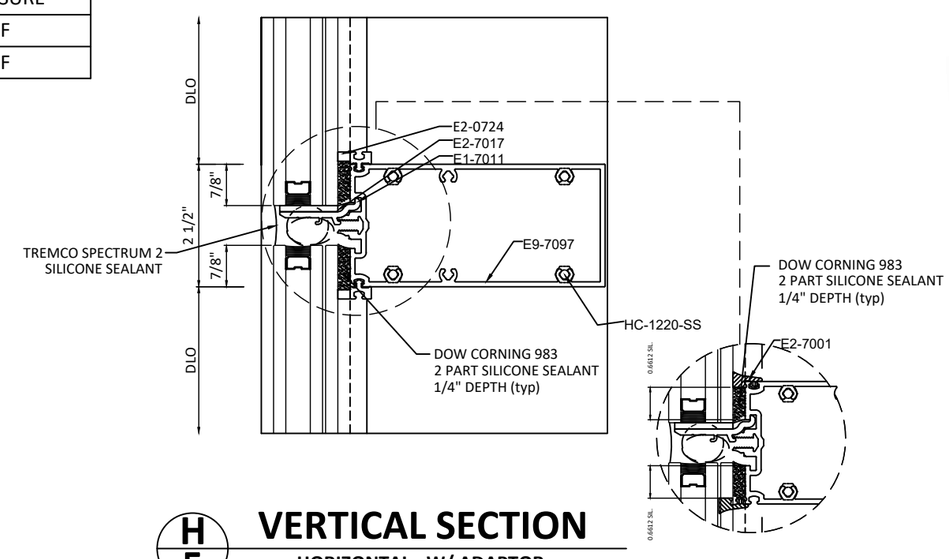

H/5 VERTICAL SECTION

HORIZONTAL - W/ ADAPTOR
SSG

G1/5 VERTICAL SECTION

HORIZONTAL - W/ OUT ADAPTOR
PRESSURE PLATE (CAPTURED)

H1/5 VERTICAL SECTION

HORIZONTAL - W/ OUT ADAPTOR
SSG

YKK AP AMERICA, Inc.
101 MARIETTA STREET NW, SUITE 2100
MIAMI, FL 33132
PH: (478)277-1955 FAX: (678)838-6001

TITLE: YUW 750 XTH UNITIZED WALL SYSTEM (HVHZ) (S.M.I.)
VERTICAL SECTIONS
HORIZONTALS

PREPARED BY:
BUILDING DROPS, INC.
1900 NE MIAMI COURT, STE. 2-15
MIAMI, FL 33132
PH: (954)399-8478
FAX: (954)744.4738
WEB: www.buildingdrops.com

REMARKS	BY	DATE
2026 FBC UPDATE	SH	07.24.26

THE INSTALLATION DETAILS DESCRIBED HEREIN ARE GENERIC AND MAY NOT REFLECT ACTUAL CONDITIONS FOR A SPECIFIC SITE. IF SITE CONDITIONS CAUSE INSTALLATION TO DEVIATE FROM THE REQUIREMENTS DETAILED HEREIN, A LICENSED ENGINEER OR ARCHITECT SHALL PREPARE SITE SPECIFIC DOCUMENTS FOR USE WITH THIS DOCUMENT.

HERMES F. NORERO LICENSE No. 73778 STATE OF FLORIDA PROFESSIONAL ENGINEER

HERMES F. NORERO, P.E.
FLORIDA P.E. No. 73778
BUILDING DROPS, INC
1900 NE MIAMI COURT, STE. 2-15
MIAMI, FL 33132
FBPE CERT. OF AUTHORIZATION No. 29578

FL #: FL16668

DATE: 10.30.13

DWG. BY: MSS | CHK. BY: HFN

SCALE: NTS

DWG. #: YKK023

SHEET: 5 | REV. A

7/24/2026 12:37 PM
c:\users\sebastianherreros\desktop\ykk 2026 cc\fl16668\ykk023.dwg

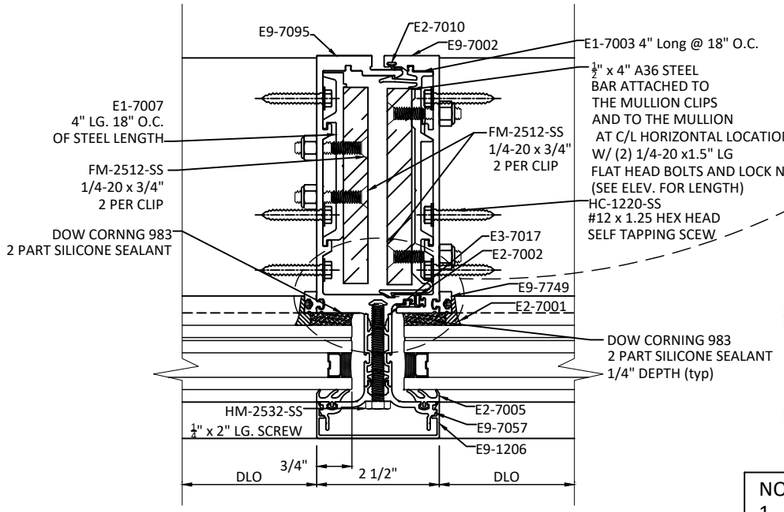

J 6 HORIZONTAL SECTION

INT. REINF. VERTICAL - W/ ADAPTOR PRESSURE PLATE (CAPTURED)

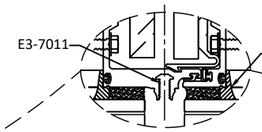

J1 6 HORIZONTAL SECTION

INT. REINF. VERTICAL - W/ OUT ADAPTOR PRESSURE PLATE (CAPTURED)

K1 6 HORIZONTAL SECTION

INT. REINF. VERTICAL - W/ OUT ADAPTOR SSG

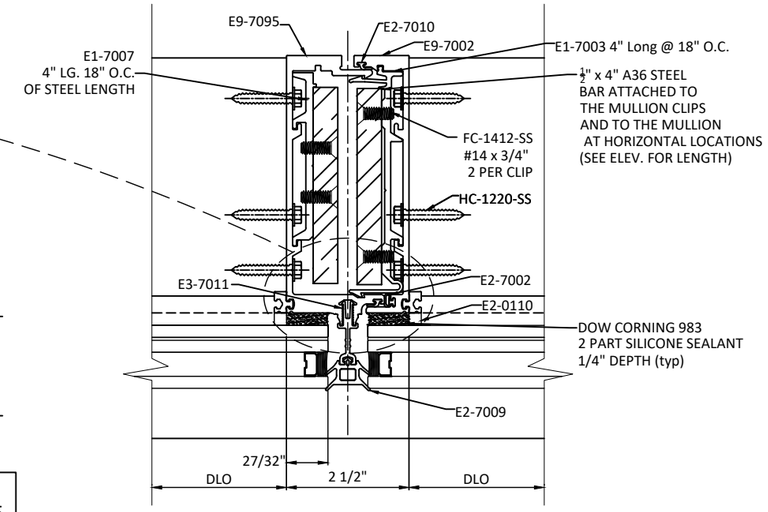

K 6 HORIZONTAL SECTION

INT. REINF. VERTICAL - W/ ADAPTOR SSG

NOTE:

1. MEMBERS SHOWN HEREIN WHICH DO NOT UTILIZE GLAZING BITE ADAPTOR, E9-7749, ARE LIMITED TO +/- 55 PSF DESIGN PRESSURE.
2. SEE SHEET 10 FOR GLAZING DETAILS.
3. SEE DESIGN PRESSURE RATINGS BASED ON MAX. ALLOWABLE SPAN, WIDTHS, & CONFIGURATIONS. SEE SHEETS 11 & 13.
4. JAMBS FOR SINGLE OR MULTI SPANS MAY BE SEALED TO OPENING WITH TREMCO'S E.T.A. SYSTEM OR BACKER ROD & SEALANT.
5. STRUCTURALLY GLAZED (SSG) UNITS WITH ADAPTOR, E9-7749, MAY USE INTERIOR GASKET, E2-7001, IN LIEU OF GLAZING TAPE, E2-0724, SUCH THAT SILICONE BITE IS INCREASED FROM 0.8430" TO 0.8743".

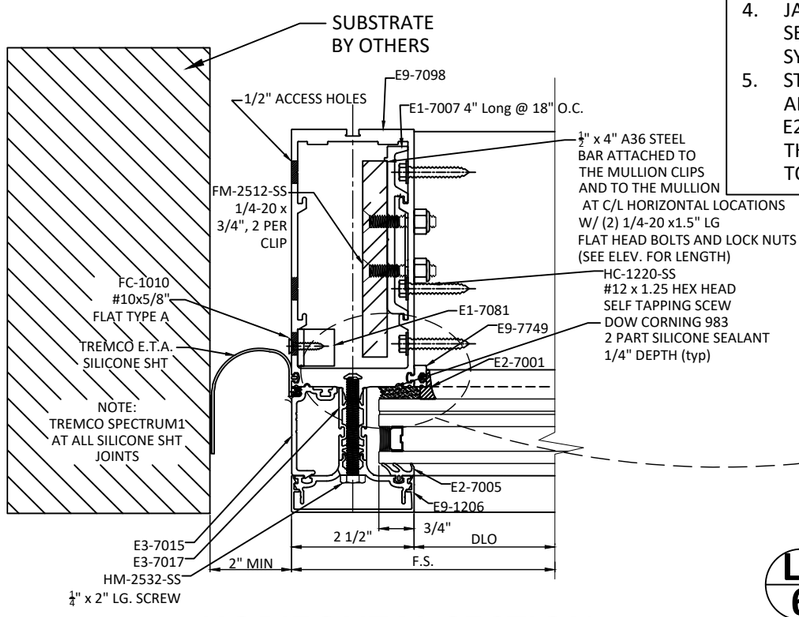

L 6 HORIZONTAL SECTION

REINF. JAMB - E.T.A W/ ADAPTOR - MULTI-SPAN

L1 6 HORIZONTAL SECTION

REINF. JAMB - E.T.A. WITHOUT ADAPTOR

M1 6 HORIZONTAL SECTION

REINF. JAMB - BACKER ROD & SEALANT WITHOUT ADAPTOR

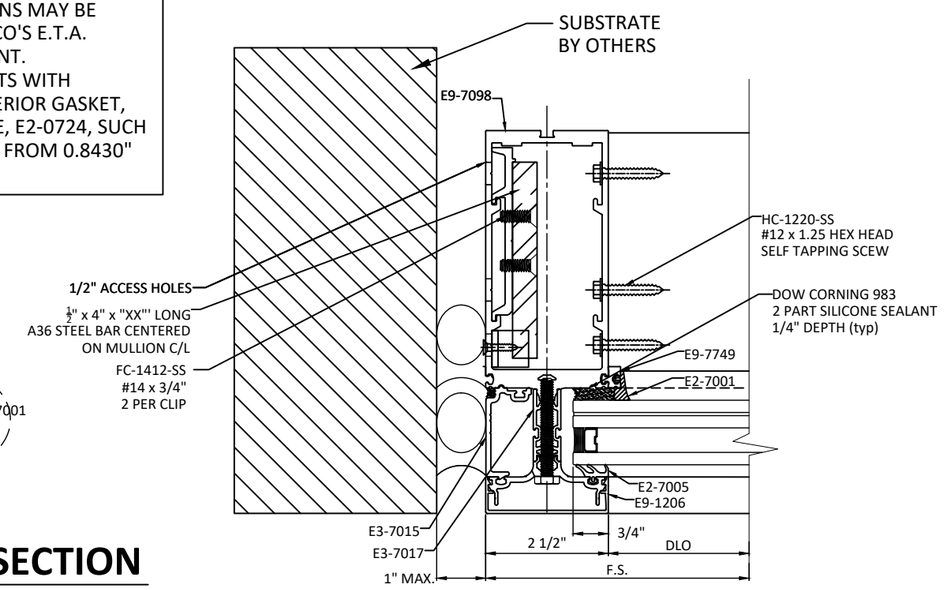

M 6 HORIZONTAL SECTION

REINF. JAMB - BACKER ROD & SEALANT W/ ADAPTOR - SINGLE-SPAN

YKK AP AMERICA, Inc.
101 MARIETTA STREET NW, SUITE 2100
MIAMI, FL 33132
PH: (478)277-1955 FAX: (678)838-6001

TITLE: YUW 750 XTH UNITIZED WALL SYSTEM (HVHZ) (S.M.I.)
HORIZONTAL SECTIONS REINFORCED VERTICALS

PREPARED BY: BUILDING DROPS, INC.
1900 NE MIAMI COURT, STE. 2-15
MIAMI, FL 33132
PH: (954)399-8478
FAX: (954)744.4738
WEB: www.buildingdrops.com

REMARKS	BY	DATE
2026 FBC UPDATE	SH	07.24.26

THE INSTALLATION DETAILS DESCRIBED HEREIN ARE GENERIC AND MAY NOT REFLECT ACTUAL CONDITIONS FOR A SPECIFIC SITE. IF SITE CONDITIONS CAUSE INSTALLATION TO DEVIATE FROM THE REQUIREMENTS DETAILED HEREIN, A LICENSED ENGINEER OR ARCHITECT SHALL PREPARE SITE SPECIFIC DOCUMENTS FOR USE WITH THIS DOCUMENT.

HERMES F. NORERO LICENSE No. 73778 STATE OF FLORIDA PROFESSIONAL ENGINEER

HERMES F. NORERO, P.E.
FLORIDA P.E. No. 73778
BUILDING DROPS, INC
1900 NE MIAMI COURT, STE. 2-15
MIAMI, FL 33132
FBPE CERT. OF AUTHORIZATION No. 29578

FL #: FL16668

DATE: 10.30.13

DWG. BY: MSS | CHK. BY: HFN

SCALE: NTS

DWG. #: YKK023

SHEET: 6 | REV. A

7/24/2026 12:37 PM
c:\users\sebastianherreros\desktop\ykk 2026 cc\fl16668\ykk023.dwg

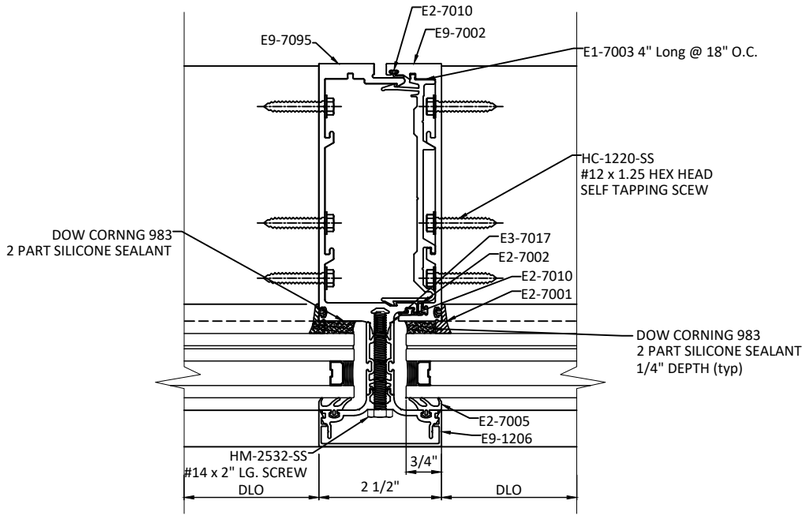

N/7 HORIZONTAL SECTION

INT. UNREINF. VERTICAL - W/ OUT ADAPTOR
PRESSURE PLATE (CAPTURED)

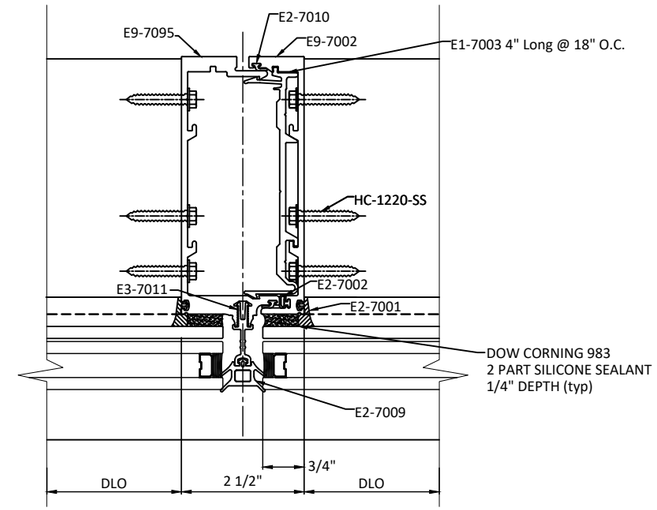

O/7 HORIZONTAL SECTION

INT. UNREINF. VERTICAL - W/ OUT ADAPTOR
SSG

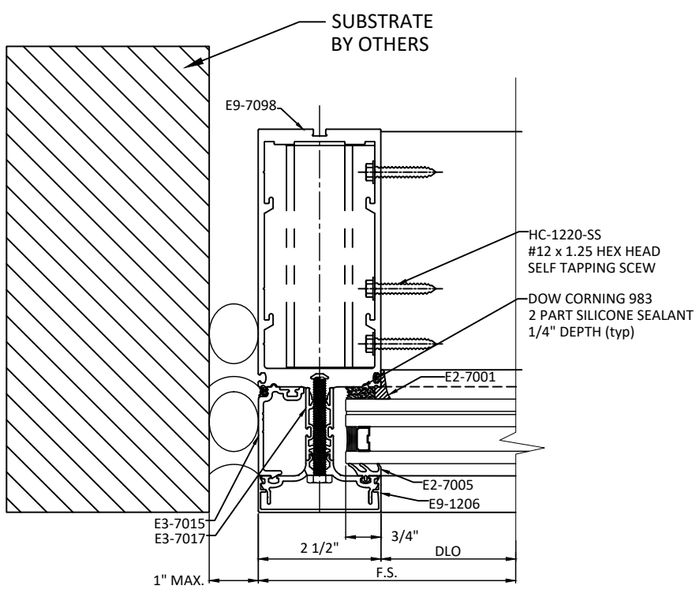

P/7 HORIZONTAL SECTION

JAMB UNREINF. VERTICAL
WITHOUT ADAPTOR

NOTE:
1. MEMBERS SHOWN HEREIN WHICH DO NOT UTILIZE GLAZING BITE ADAPTOR, E9-7749, ARE LIMITED TO +/- 55 PSF DESIGN PRESSURE.
2. SEE SHEET 10 FOR GLAZING DETAILS.
3. SEE DESIGN PRESSURE RATINGS BASED ON MAX. ALLOWABLE SPAN, WIDTHS, & CONFIGURATIONS. SHEET 12.
4. JAMBS FOR SINGLE OR MULTI SPANS MAY BE SEALED TO OPENING WITH TREMCO'S E.T.A. SYSTEM OR BACKER ROD & SEALANT.

YKK AP AMERICA, Inc.
101 MARIETTA STREET NW, SUITE 2100
MIAMI, FL 33132
PH: (478)277-1955 FAX: (678)838-6001

TITLE: YUW 750 XTH UNITIZED WALL SYSTEM (HVHZ) (S.M.I.)
HORIZONTAL SECTIONS
UNREINFORCED VERTICALS

PREPARED BY:
BUILDING DROPS, INC.
1900 NE MIAMI COURT, STE. 2-15
MIAMI, FL 33132
PH: (954)399-8478
FAX: (954)744.4738
WEB: www.buildingdrops.com

REMARKS	BY	DATE
2026 FBC UPDATE	SH	07.24.26

THE INSTALLATION DETAILS DESCRIBED HEREIN ARE GENERIC AND MAY NOT REFLECT ACTUAL CONDITIONS FOR A SPECIFIC SITE. IF SITE CONDITIONS CAUSE INSTALLATION TO DEVIATE FROM THE REQUIREMENTS DETAILED HEREIN, A LICENSED ENGINEER OR ARCHITECT SHALL PREPARE SITE SPECIFIC DOCUMENTS FOR USE WITH THIS DOCUMENT.

HERMES F. NORERO LICENSE No. 73778 STATE OF FLORIDA PROFESSIONAL ENGINEER

HERMES F. NORERO, P.E.
FLORIDA P.E. No. 73778
BUILDING DROPS, INC
1900 NE MIAMI COURT, STE. 2-15
MIAMI, FL 33132
FBPE CERT. OF AUTHORIZATION No. 29578

FL #: FL16668

DATE: 10.30.13

DWG. BY: MSS | CHK. BY: HFN

SCALE: NTS

DWG. #: YKK023

SHEET: 7 | REV. A

7/24/2026 12:37 PM
c:\users\sebastianherreros\desktop\ykk 2026 cc\fl16668\ykk023.dwg

7/24/2026 12:37 PM

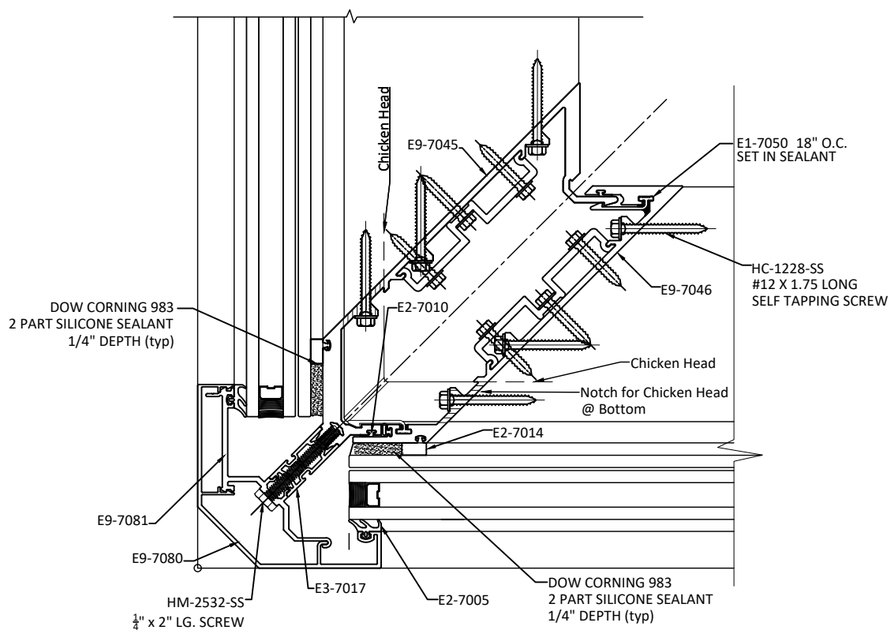

Q/8 HORIZONTAL SECTION

OUTSIDE CORNER
SINGLE & MULTI SPAN

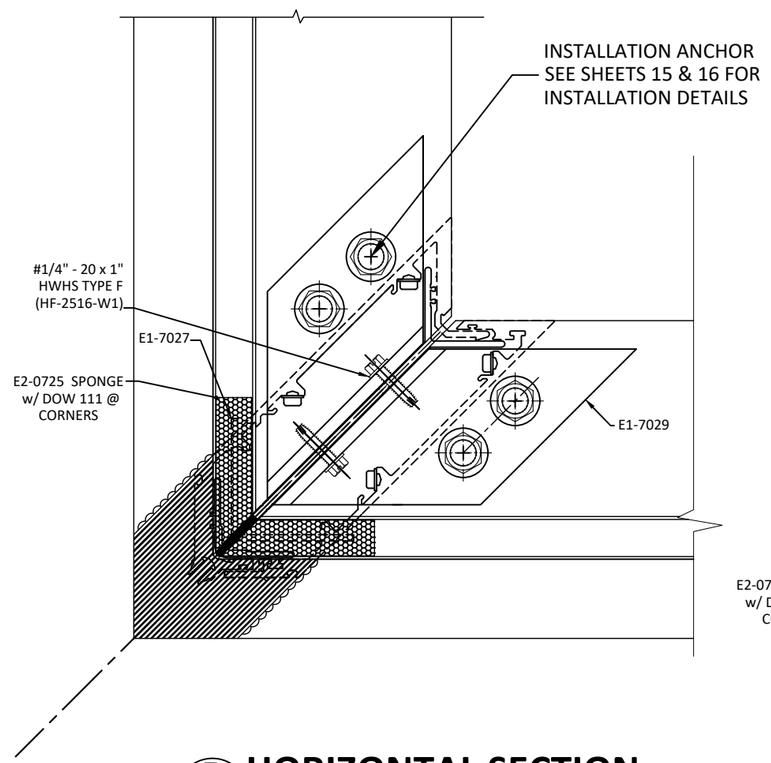

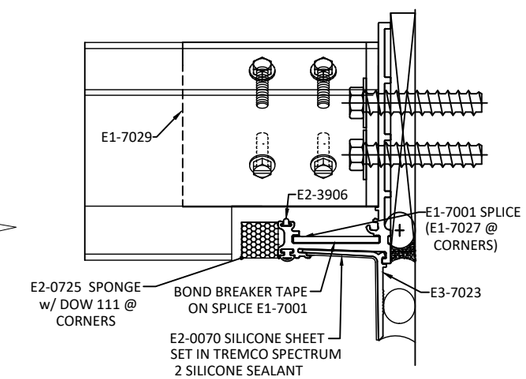

R/8 HORIZONTAL SECTION

OUTSIDE CORNER
SILL STARTER CORNER & T-ANCHOR

NOTE:
1. CORNER MEMBERS SHOWN HEREIN DO NOT REQUIRE USE OF GLAZING BITE ADAPTOR , E9-7749, TO OBTAIN DP +/- 80 PSF PERFORMANCE.
2. SEE SHEET 10 FOR GLAZING DETAILS.
3. SEE DESIGN PRESSURE RATINGS BASED ON MAX. ALLOWABLE SPAN, WIDTHS, & CONFIGURATIONS. SHEET 12.

YKK AP AMERICA, Inc.
101 MARIETTA STREET NW, SUITE 2100
MIAMI, FL 33132
PH: (478)277-1955 FAX: (678)838-6001

TITLE: YUW 750 XTH UNITIZED WALL SYSTEM (HVHZ) (S.M.I.)
HORIZONTAL SECTIONS
OUTSIDE 90 CORNER

PREPARED BY:
BUILDING DROPS, INC.
1900 NE MIAMI COURT, STE. 2-15
MIAMI, FL 33132
PH: (954)399-8478
FAX: (954)744.4738
WEB: www.buildingdrops.com

REMARKS	BY	DATE
2026 FBC UPDATE	SH	07.24.26

THE INSTALLATION DETAILS DESCRIBED HEREIN ARE GENERIC AND MAY NOT REFLECT ACTUAL CONDITIONS FOR A SPECIFIC SITE. IF SITE CONDITIONS CAUSE INSTALLATION TO DEVIATE FROM THE REQUIREMENTS DETAILED HEREIN, A LICENSED ENGINEER OR ARCHITECT SHALL PREPARE SITE SPECIFIC DOCUMENTS FOR USE WITH THIS DOCUMENT.

HERMES F. NORERO LICENSE No. 73778 STATE OF FLORIDA PROFESSIONAL ENGINEER

HERMES F. NORERO, P.E.
FLORIDA P.E. No. 73778
BUILDING DROPS, INC
1900 NE MIAMI COURT, STE. 2-15
MIAMI, FL 33132
FBPE CERT. OF AUTHORIZATION No. 29578

FL #: FL16668

DATE: 10.30.13

DWG. BY: MSS | CHK. BY: HFN

SCALE: NTS

DWG. #: YKK023

SHEET: 8 | REV. A

OF 26

c:\users\sebastianherreros\desktop\ykk 2026 cc\fl16668\ykk023.dwg

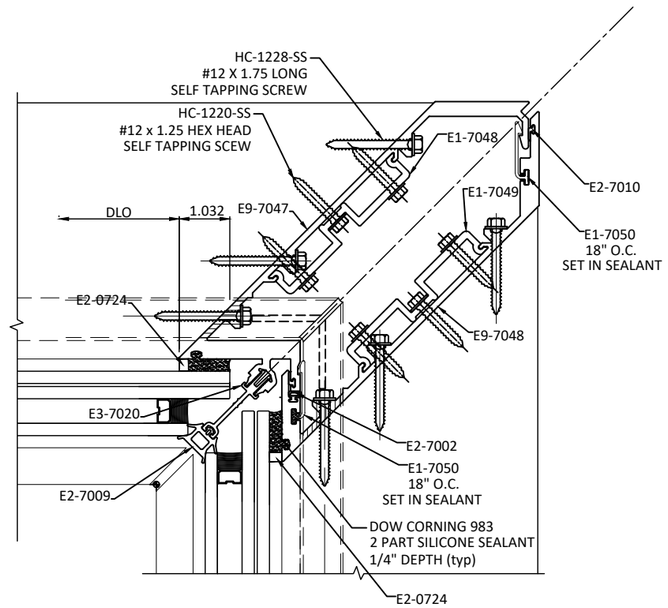

S/9 HORIZONTAL SECTION

INSIDE CORNER
SINGLE & MULTI SPAN

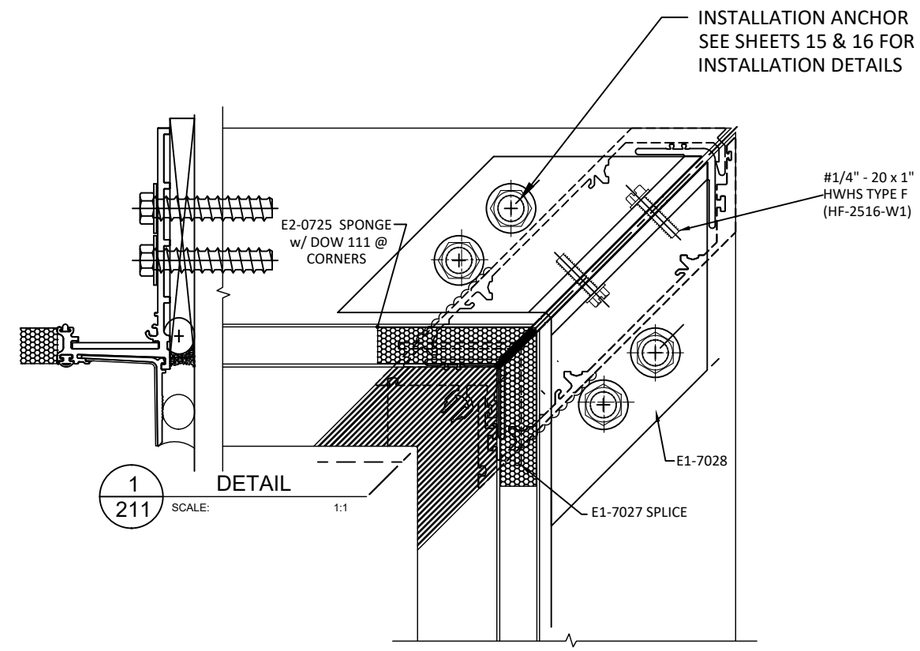

T/9 HORIZONTAL SECTION

INSIDE CORNER
SILL STARTER CORNER & T-ANCHOR

NOTE:
1. CORNER MEMBERS SHOWN HEREIN DO NOT REQUIRE USE OF GLAZING BITE ADAPTOR , E9-7749, TO OBTAIN DP +/- 80 PSF PERFORMANCE.
2. SEE SHEET 10 FOR GLAZING DETAILS.
3. SEE DESIGN PRESSURE RATINGS BASED ON MAX. ALLOWABLE SPAN, WIDTHS, & CONFIGURATIONS. SHEET 12.

YKK AP AMERICA, Inc.
101 MARIETTA STREET NW, SUITE 2100
MIAMI, FL 33132
PH: (478)277-1955 FAX: (678)838-6001

TITLE: YUW 750 XTH UNITIZED WALL SYSTEM (HVHZ) (S.M.I.)
HORIZONTAL SECTIONS
INSIDE 90 CORNER

PREPARED BY:
BUILDING DROPS, INC.
1900 NE MIAMI COURT, STE. 2-15
MIAMI, FL 33132
PH: (954)399-8478
FAX: (954)744.4738
WEB: www.buildingdrops.com

REMARKS	BY	DATE
2026 FBC UPDATE	SH	07.24.26

THE INSTALLATION DETAILS DESCRIBED HEREIN ARE GENERIC AND MAY NOT REFLECT ACTUAL CONDITIONS FOR A SPECIFIC SITE. IF SITE CONDITIONS CAUSE INSTALLATION TO DEVIATE FROM THE REQUIREMENTS DETAILED HEREIN, A LICENSED ENGINEER OR ARCHITECT SHALL PREPARE SITE SPECIFIC DOCUMENTS FOR USE WITH THIS DOCUMENT.

HERMES F. NORERO
LICENSE
No. 73778
STATE OF
FLORIDA
PROFESSIONAL ENGINEER

HERMES F. NORERO, P.E.
FLORIDA P.E. No. 73778
BUILDING DROPS, INC
1900 NE MIAMI COURT, STE. 2-15
MIAMI, FL 33132
FBPE CERT. OF AUTHORIZATION No. 29578

FL #: FL16668

DATE: 10.30.13

DWG. BY: MSS | CHK. BY: HFN

SCALE: NTS

DWG. #: YKK023

SHEET: 9 | REV. A

7/24/2026 12:37 PM
c:\users\sebastianherreros\desktop\ykk 2026 cc\f116668\ykk023.dwg

D.L.O.		GLASS TYPE DESIGN PRESSURES (PSF)	
MAX. WIDTH (IN.)	MAX. HEIGHT (IN.)	A & B	
		+	-
24	162	80.0	80.0
28	162	80.0	80.0
32	162	80.0	80.0
36	162	80.0	80.0
40	162	80.0	80.0
44	153	80.0	80.0
48	141	80.0	80.0
52	130	80.0	80.0
56	120	80.0	80.0
57.75	117.3125	80.0	80.0

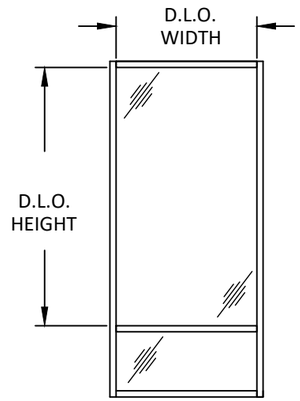

GLASS TABLE NOTES:

1. GLASS CAPACITIES ON THIS SHEET ARE BASED ON ASTM E1300 (3 SEC. GUSTS).
2. GLASS CAPACITIES ARE LIMITED BY THE RESULTS OF COMPARATIVE ANALYSIS IN ACCORDANCE WITH SECTION 1710 OF THE CURRENT FBC.
3. WHERE REQUIRED, TEMPERED GLASS IS REQUIRED TO BE USED TO COMPLY WITH SAFETY GLAZING REQUIREMENTS OUTLINED IN CHAPTER 24 OF THE CURRENT FBC.

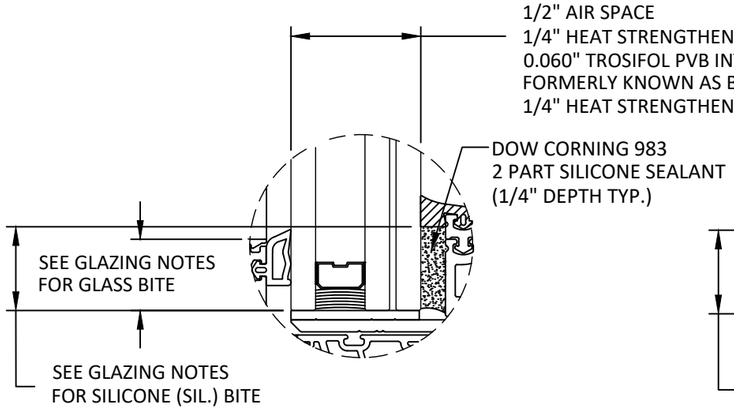

GLAZING OPTION A

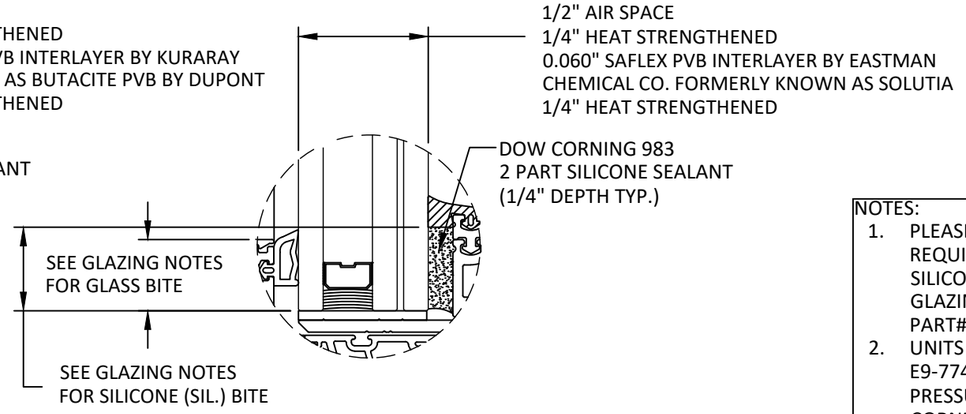

GLAZING OPTION B

AIR SPACE CONSISTING OF :
- SPACER: ALUMINUM BOX SPACER.
- PRIMARY SEALANT: POLYISOBUTYLENE (PIB).
- SECONDARY SEALANT: STRUCTURAL SILICONE INTENDED FOR FABRICATION OF INSULATING GLASS UNITS.

NOTES:

1. PLEASE REFER TO DETAILS ON SHEETS 3-7 FOR REQUIRED GLASS & SILICONE BITE. GLASS BITE & SILICONE BITE REQUIREMENTS ARE DEPENDENT ON GLAZING MEMBER, AND IF GLASS BITE ADAPTORS, PART# E9-7749, ARE UTILIZED.
2. UNITS GLAZED WITHOUT GLASS BITE ADAPTOR, PART# E9-7749, ARE LIMITED TO A MAXIMUM DESIGN PRESSURE OF +/- 55 PSF WITH EXCEPTION OF VERTICAL CORNER MEMBERS WHICH DO NOT REQUIRE THE USE OF GLASS BITE ADAPTOR TO OBTAIN DP +/- 80 PSF PERFORMANCE.
3. GLASS THICKNESS AND TYPE SHALL COMPLY WITH ASTM E1300 GLASS CHART REQUIREMENTS.
4. ALL GLAZING CONFIGURATIONS SHALL COMPLY WITH SAFETY GLAZING REQUIREMENTS OUTLINED IN THE FBC.
5. ALL LITES GREATER THAN 36" IN WIDTH SHALL UTILIZE SETTING BLOCKS IN ACCORDANCE WITH THE FBC. CH. 24
6. SETTING BLOCK DUROMETER HARDNESS OF 70-90 (SHORE A) AS REFERENCED IN CHAPTER 24.

YKK AP AMERICA, Inc.
101 MARIETTA STREET NW, SUITE 2100
MIAMI, FL 33132
PH: (478)277-1955 FAX: (678)838-6001

TITLE: YUW 750 XTH UNITIZED WALL SYSTEM (HVHZ) (S.M.I.)
GLASS TYPE DESIGN PRESSURE TABLE

PREPARED BY: BUILDING DROPS, INC.
1900 NE MIAMI COURT, STE. 2-15
MIAMI, FL 33132
PH: (954)399-8478
FAX: (954)744.4738
WEB: www.buildingdrops.com

REMARKS	BY	DATE
2026 FBC UPDATE	SH	07.24.26

THE INSTALLATION DETAILS DESCRIBED HEREIN ARE GENERIC AND MAY NOT REFLECT ACTUAL CONDITIONS FOR A SPECIFIC SITE. IF SITE CONDITIONS CAUSE INSTALLATION TO DEVIATE FROM THE REQUIREMENTS DETAILED HEREIN, A LICENSED ENGINEER OR ARCHITECT SHALL PREPARE SITE SPECIFIC DOCUMENTS FOR USE WITH THIS DOCUMENT.

HERMES F. NORERO LICENSE No. 73778 STATE OF FLORIDA PROFESSIONAL ENGINEER

HERMES F. NORERO, P.E.
FLORIDA P.E. No. 73778
BUILDING DROPS, INC
1900 NE MIAMI COURT, STE. 2-15
MIAMI, FL 33132
FBPE CERT. OF AUTHORIZATION No. 29578

FL #: FL16668

DATE: 10.30.13

DWG. BY: MSS | CHK. BY: HFN

SCALE: NTS

DWG. #: YKK023

SHEET: 10 | REV. A

OF 26

7/24/2026 12:37 PM
c:\users\sebastianherreros\desktop\ykk 2026 cc\fl16668\ykk023.dwg

SINGLE SPAN DESIGN PRESSURE TABLE: REINFORCED VERTICAL MEMBERS			
MAX. TRIB. WIDTH ('W')	MAX. SPAN ('H')	ADAPTOR (E9-7749) [1]	DESIGN PRESSURE
60 1/4"	150"	WITH	+/- 80 PSF
60 1/4"	150"	WITHOUT	+/- 55 PSF

REINFORCED VERTICAL MEMBER NOTES:

1. VERTICAL CORNER MEMBERS DO NOT REQUIRE USE OF GLASS BITE ADAPTOR (E9-7747) TO OBTAIN DP +/- 80 PSF PERFORMANCE.
2. DETAILS BELOW HAVE BEEN SHOWN FOR ILLUSTRATIVE PURPOSES. FOR DETAILS OF FULL ASSEMBLY PLEASE REFER TO APPLICABLE DETAILS ON SHEETS 6, 8, & 9.
3. TABULATED DESIGN PRESSURE VALUES ARE BASED ON LIMITATIONS OF DEFLECTION, FIBERSTRESS, END REACTION, AND ANCHOR CAPACITY FOR GIVEN COMBINATIONS OF MULLION SPAN ('H') AND MULLION SPACING ('W').
4. FOR SITE WHICH EXCEED LIMITATIONS SHOWN, FURTHER ENGINEERING MAY BE REQUIRED ON A CASE BY CASE BASIS.
5. FOR T, F, & CORNER CLIP ANCHORS, PLEASE REFER TO SHEET 16 FOR ANCHOR SELECTION, SUBSTRATE REQUIREMENTS, AND FURTHER LIMITATIONS OF USE.

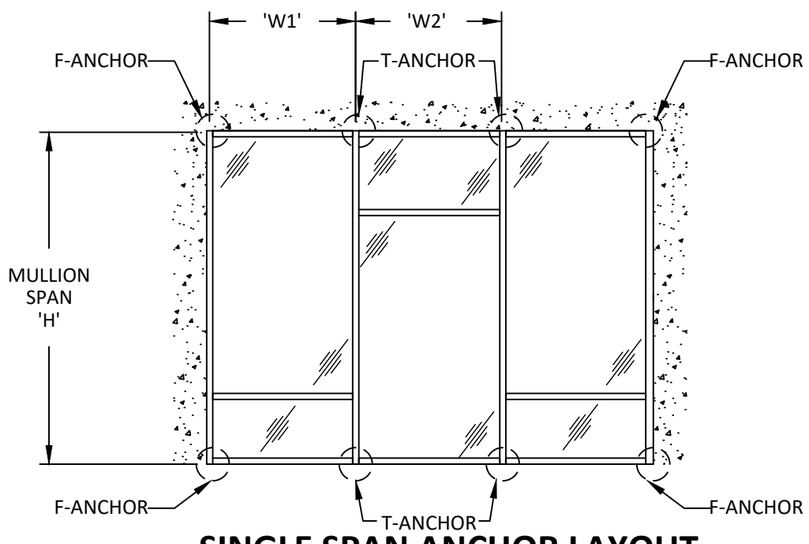

SINGLE SPAN ANCHOR LAYOUT

MULLION SPACING OR BAY WIDTH, 'W'	$W = \frac{W1+W2}{2}$

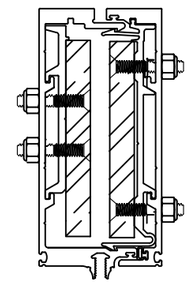

INTERMEDIATE REINFORCED VERTICAL

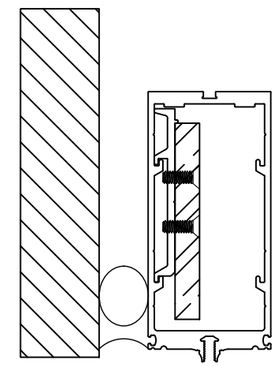

REINFORCED JAMB

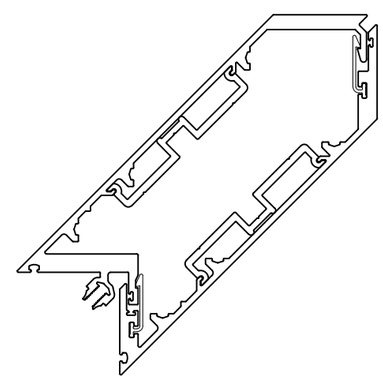

INSIDE 90 DEGREE CORNER

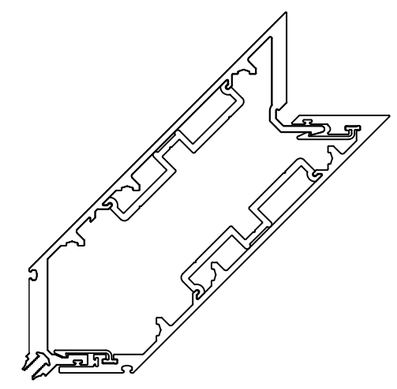

OUTSIDE 90 DEGREE CORNER

YKK AP AMERICA, Inc.
101 MARIETTA STREET NW, SUITE 2100
MIAMI, FL 33132
PH: (478)277-1955 FAX: (678)838-6001

TITLE: YUW 750 XTH UNITIZED WALL SYSTEM (HVHZ) (S.M.I.)
SINGLE SPAN DP TABLES: REINFORCED VERTICALS

PREPARED BY: BUILDING DROPS, INC.
1900 NE MIAMI COURT, STE. 2-15
MIAMI, FL 33132
PH: (954)399-8478
FAX: (954)744.4738
WEB: www.buildingdrops.com

REMARKS	BY	DATE
2026 FBC UPDATE	SH	07.24.26

THE INSTALLATION DETAILS DESCRIBED HEREIN ARE GENERIC AND MAY NOT REFLECT ACTUAL CONDITIONS FOR A SPECIFIC SITE. IF SITE CONDITIONS CAUSE INSTALLATION TO DEVIATE FROM THE REQUIREMENTS DETAILED HEREIN, A LICENSED ENGINEER OR ARCHITECT SHALL PREPARE SITE SPECIFIC DOCUMENTS FOR USE WITH THIS DOCUMENT.

HERMES F. NORERO LICENSE No. 73778 STATE OF FLORIDA PROFESSIONAL ENGINEER

HERMES F. NORERO, P.E.
REGISTERED NAME
BUILDING DROPS, INC
1900 NE MIAMI COURT, STE. 2-15
MIAMI, FL 33132
FBPE CERT. OF AUTHORIZATION No. 29578

FL #: FL16668

DATE: 10.30.13

DWG. BY: MSS | CHK. BY: HFN

SCALE: NTS

DWG. #: YKK023

SHEET: 11 OF 26 | REV. A

7/24/2026 12:37 PM
c:\users\sebastianherreros\desktop\ykk 2026 cc\fl16668\ykk023.dwg

SINGLE SPAN DESIGN PRESSURE TABLE: UNREINFORCED VERTICAL MEMBERS			
MAX. TRIB. WIDTH ('W')	MAX. SPAN ('H')	ADAPTOR (E9-7749) [1]	DESIGN PRESSURE
60 1/4"	120 1/4"	WITHOUT	+/- 55 PSF

UNREINFORCED VERTICAL MEMBER NOTES:

1. VERTICAL CORNER MEMBERS DO NOT REQUIRE USE OF GLASS BITE ADAPTOR (E9-7747) TO OBTAIN DP +/- 80 PSF PERFORMANCE.
2. DETAILS BELOW HAVE BEEN SHOWN FOR ILLUSTRATIVE PURPOSES. FOR DETAILS OF FULL ASSEMBLY PLEASE REFER TO APPLICABLE DETAILS ON SHEET 7-9.
3. TABULATED DESIGN PRESSURE VALUES ARE BASED ON LIMITATIONS OF DEFLECTION, FIBERSTRESS, END REACTION, AND ANCHOR CAPACITY FOR GIVEN COMBINATIONS OF MULLION SPAN ('H') AND MULLION SPACING ('W').
4. FOR SITE CONDITIONS WHICH EXCEED LIMITATIONS SHOWN, FURTHER ENGINEERING SHALL BE REQUIRED ON A CASE BY CASE BASIS.
5. FOR T, F, & CORNER CLIP ANCHORS, PLEASE REFER TO SHEET 16 FOR ANCHOR SELECTION, SUBSTRATE REQUIREMENTS, AND FURTHER LIMITATIONS OF USE.

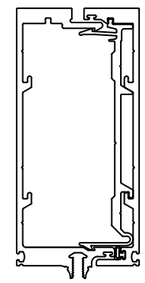

INTERMEDIATE UNREINFORCED VERTICAL

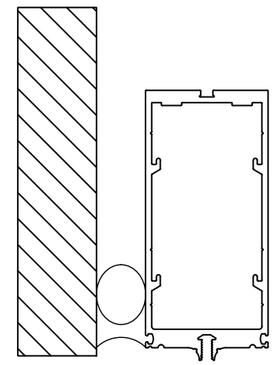

UNREINFORCED JAMB

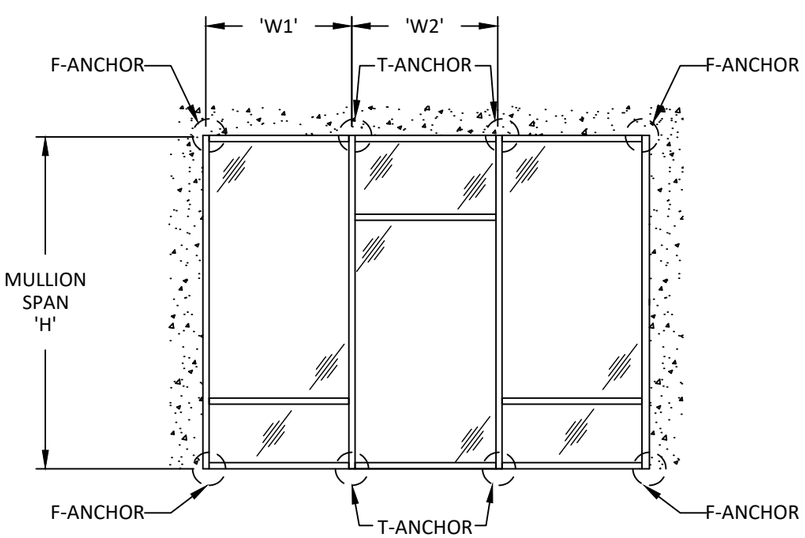

SINGLE SPAN ANCHOR LAYOUT

MULLION SPACING OR BAY WIDTH, 'W'	$W = \frac{W1+W2}{2}$

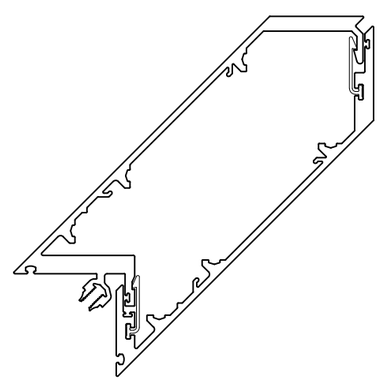

INSIDE 90 DEGREE CORNER

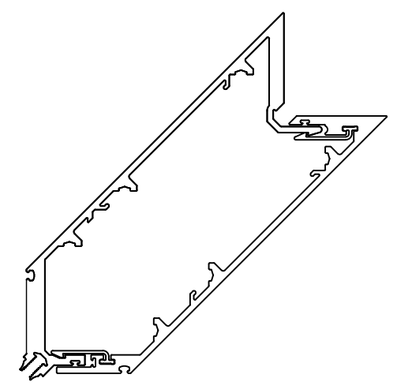

OUTSIDE 90 DEGREE CORNER

YKK AP AMERICA, Inc.
101 MARIETTA STREET NW, SUITE 2100
MIAMI, FL 33132
PH: (478)277-1955 FAX: (678)838-6001

TITLE: YUW 750 XTH UNITIZED WALL SYSTEM (HVHZ) (S.M.I.)
SINGLE SPAN DP TABLE: UNREINFORCED VERTICALS

PREPARED BY:
BUILDING DROPS, INC.
1900 NE MIAMI COURT, STE. 2-15
MIAMI, FL 33132
PH: (954)399-8478
FAX: (954)744.4738
WEB: www.buildingdrops.com

REMARKS	BY	DATE
2026 FBC UPDATE	SH	07.24.26

THE INSTALLATION DETAILS DESCRIBED HEREIN ARE GENERIC AND MAY NOT REFLECT ACTUAL CONDITIONS FOR A SPECIFIC SITE. IF SITE CONDITIONS CAUSE INSTALLATION TO DEVIATE FROM THE REQUIREMENTS DETAILED HEREIN, A LICENSED ENGINEER OR ARCHITECT SHALL PREPARE SITE SPECIFIC DOCUMENTS FOR USE WITH THIS DOCUMENT.

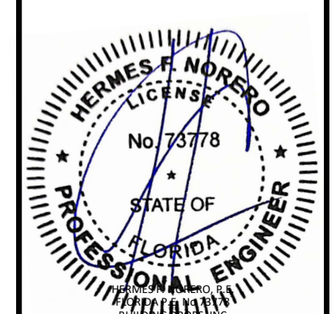

HERMES F. NORERO P.E.
FLORIDA LICENSE No. 73778
BUILDING DROPS, INC
1900 NE MIAMI COURT, STE. 2-15
MIAMI, FL 33132
FBPE CERT. OF AUTHORIZATION No. 29578

FL #: FL16668

DATE: 10.30.13

DWG. BY: MSS | CHK. BY: HFN

SCALE: NTS

DWG. #: YKK023

SHEET: 12 OF 26 | REV. A

7/24/2026 12:37 PM
c:\users\sebastianherreros\desktop\ykk 2026 cc\fl16668\ykk023.dwg

MULTI SPAN DESIGN PRESSURE TABLE: REINFORCED VERTICAL MEMBERS				
MAX. TRIB. WIDTH ('W')	MAX. SPAN ('H1')	MAX. SPAN ('H2')	ADAPTOR (E9-7749) [1]	DESIGN PRESSURE
60 1/4"	162"	150"	WITH	+/- 80 PSF

MULTI SPAN REINFORCED VERTICAL MEMBER NOTES:

1. VERTICAL CORNER MEMBERS DO NOT REQUIRE USE OF GLASS BITE ADAPTOR (E9-7747) TO OBTAIN DP +/- 80 PSF PERFORMANCE.
2. DETAILS BELOW HAVE BEEN SHOWN FOR ILLUSTRATIVE PURPOSES. FOR DETAILS OF FULL ASSEMBLY PLEASE REFER TO APPLICABLE DETAILS ON SHEET 6, 8, & 9.
3. TABULATED DESIGN PRESSURE VALUES ARE BASED ON LIMITATIONS OF DEFLECTION, FIBERSTRESS, END REACTION, AND ANCHOR CAPACITY FOR GIVEN COMBINATIONS OF MULLION SPAN ('H1')/('H2') AND MULLION SPACING ('W').
4. FOR SITE CONDITIONS WHICH EXCEED LIMITATIONS SHOWN FURTHER ENGINEERING SHALL BE REQUIRED ON A CASE BY CASE BASIS.
5. FOR T, F, & CORNER CLIP ANCHORS, PLEASE REFER TO SHEET 16 FOR ANCHOR SELECTION, SUBSTRATE REQUIREMENTS, AND FURTHER LIMITATIONS OF USE.
6. FOR DEAD LOAD L-ANCHORS, PLEASE REFER TO SHEET 17 FOR ANCHOR SELECTION, SUBSTRATE REQUIREMENTS, AND FURTHER LIMITATIONS OF USE.

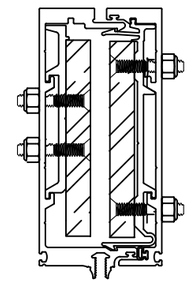

INTERMEDIATE REINFORCED VERTICAL

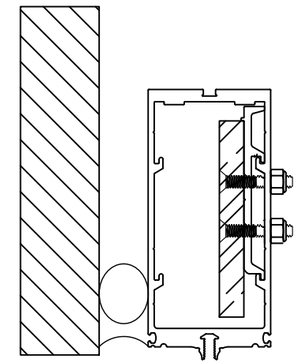

REINFORCED JAMB

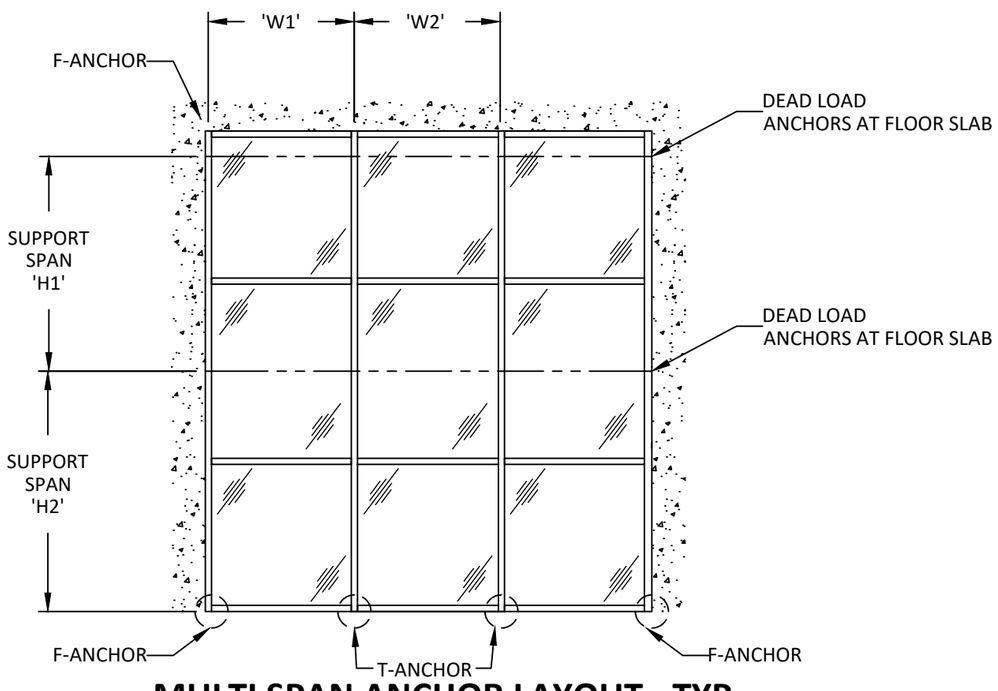

MULTI SPAN ANCHOR LAYOUT - TYP.

MULLION SPACING OR BAY WIDTH, 'W'	$W = \frac{W1+W2}{2}$

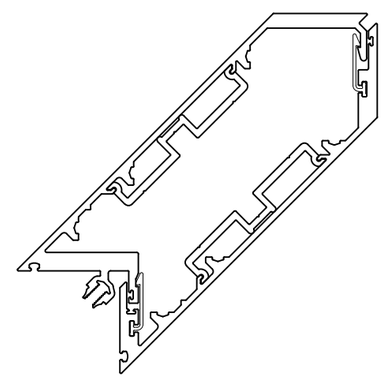

INSIDE 90 DEGREE CORNER

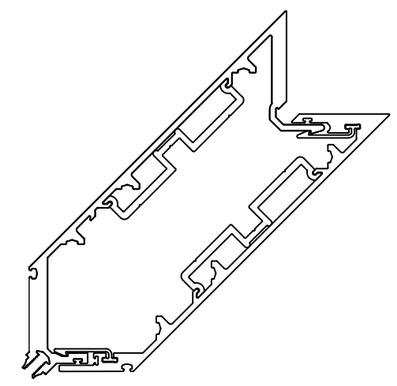

OUTSIDE 90 DEGREE CORNER

YKK AP AMERICA, Inc.
101 MARIETTA STREET NW, SUITE 2100
MIAMI, FL 33132
PH: (478)277-1955 FAX: (678)838-6001

TITLE: YUW 750 XTH UNITIZED WALL SYSTEM (HVHZ) (S.M.I.)
MULTI SPAN DP TABLE: REINFORCED VERTICAL MEMBERS

PREPARED BY: BUILDING DROPS, INC.
1900 NE MIAMI COURT, STE. 2-15
MIAMI, FL 33132
PH: (954)399-8478
FAX: (954)744.4738
WEB: www.buildingdrops.com

REMARKS	BY	DATE
2026 FBC UPDATE	SH	07.24.26

THE INSTALLATION DETAILS DESCRIBED HEREIN ARE GENERIC AND MAY NOT REFLECT ACTUAL CONDITIONS FOR A SPECIFIC SITE. IF SITE CONDITIONS CAUSE INSTALLATION TO DEVIATE FROM THE REQUIREMENTS DETAILED HEREIN, A LICENSED ENGINEER OR ARCHITECT SHALL PREPARE SITE SPECIFIC DOCUMENTS FOR USE WITH THIS DOCUMENT.

HERMES F. NORERO LICENSE No. 73778 STATE OF FLORIDA PROFESSIONAL ENGINEER

HERMES F. NORERO, P.E.
FLORIDA P.E. No. 73778
BUILDING DROPS, INC
1900 NE MIAMI COURT, STE. 2-15
MIAMI, FL 33132
FBPE CERT. OF AUTHORIZATION No. 29578

FL #: FL16668

DATE: 10.30.13

DWG. BY: MSS | CHK. BY: HFN

SCALE: NTS

DWG. #: YKK023

SHEET: 13 OF 26 | REV. A

7/24/2026 12:37 PM
c:\users\sebastianherreros\desktop\ykk 2026 cc\fl16668\ykk023.dwg

7/24/2026 12:37 PM

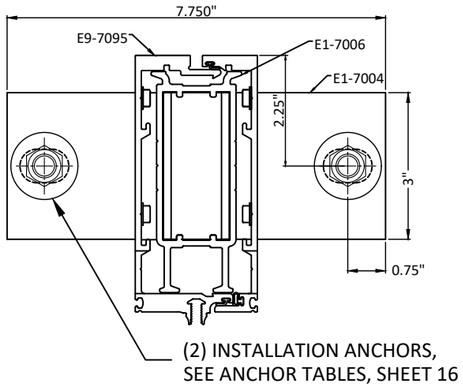

T-CLIP ANCHORS
AT MULLIONS W/ SILL STARTER

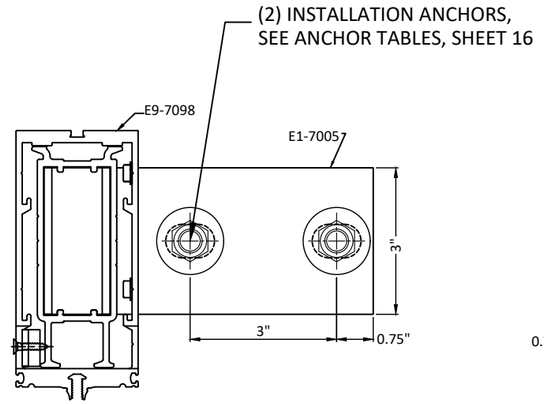

F-CLIP ANCHORS
AT JAMBS W/ SILL STARTER

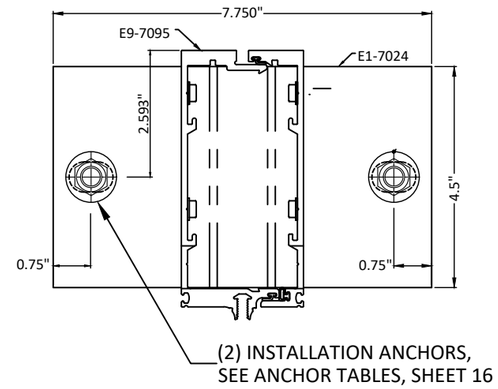

T-CLIP ANCHORS
AT MULLIONS W/ OUT SILL STARTER

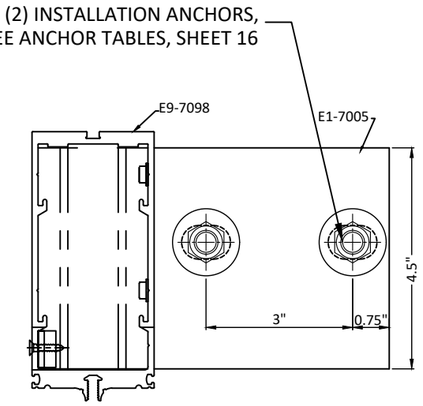

F-CLIP ANCHORS
AT JAMBS W/ OUT SILL STARTER

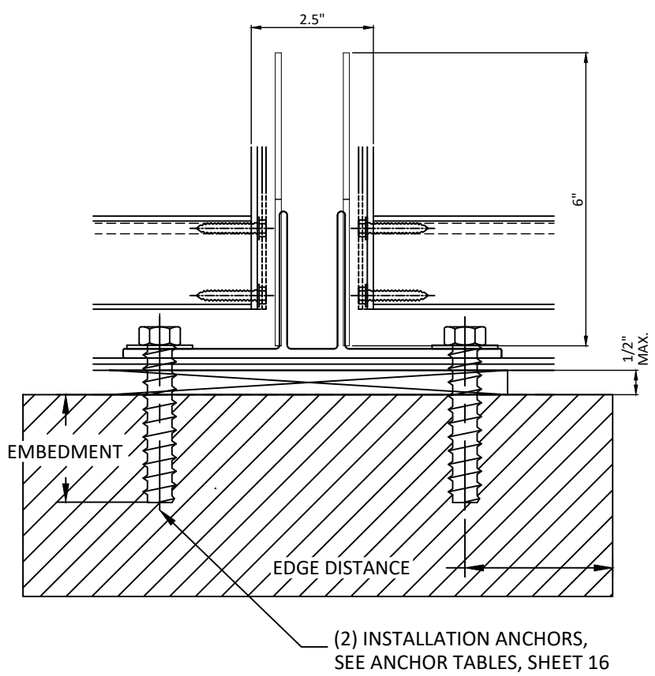

U 14 **FRONT VEW**
T-CLIP AT VERTICAL MULLION WITH SILL STARTER

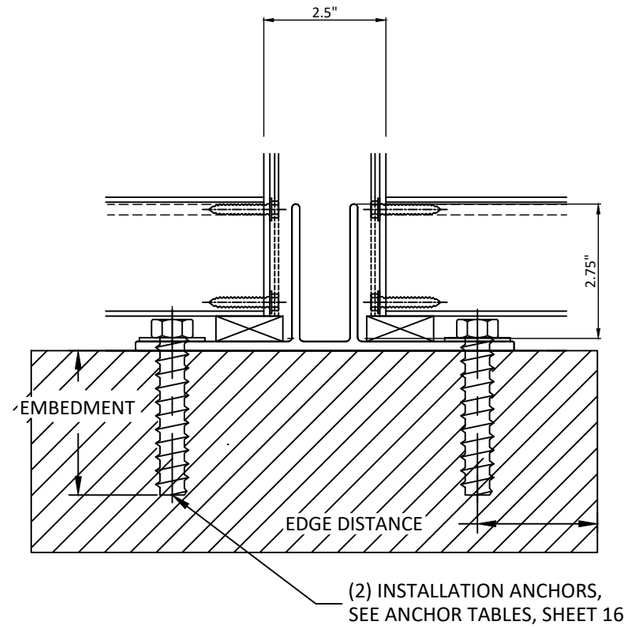

V 14 **FRONT VEW**
T-CLIP AT VERTICAL MULLION WITHOUT SILL STARTER

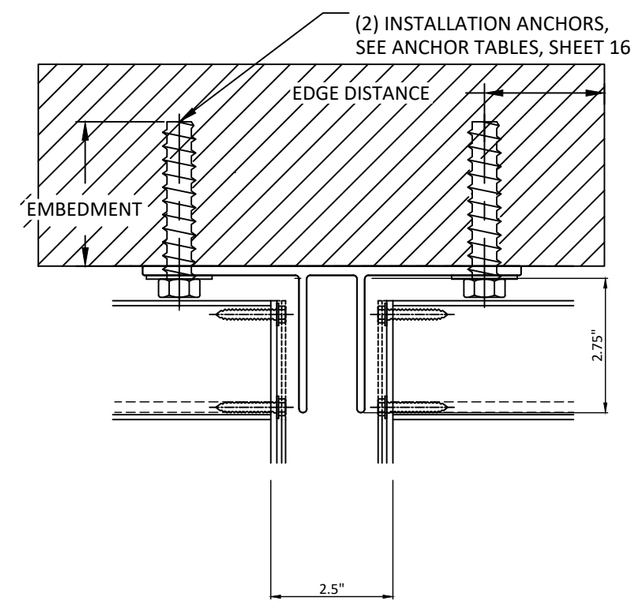

V1 14 **FRONT VEW**
T-CLIP AT VERTICAL MULLION HEAD

YKK AP AMERICA, Inc.
101 MARIETTA STREET NW, SUITE 2100
MIAMI, FL 33132
PH: (478)277-1955 FAX: (678)838-6001

TITLE: YUW 750 XTH UNITIZED WALL SYSTEM (HVHZ) (S.M.I.)
T & F CLIP ANCHOR DETAILS

PREPARED BY:
BUILDING DROPS, INC.
1900 NE MIAMI COURT, STE. 2-15
MIAMI, FL 33132
PH: (954)399-8478
FAX: (954)744.4738
WEB: www.buildingdrops.com

REMARKS	BY	DATE
2026 FBC UPDATE	SH	07.24.26

THE INSTALLATION DETAILS DESCRIBED HEREIN ARE GENERIC AND MAY NOT REFLECT ACTUAL CONDITIONS FOR A SPECIFIC SITE. IF SITE CONDITIONS CAUSE INSTALLATION TO DEVIATE FROM THE REQUIREMENTS DETAILED HEREIN, A LICENSED ENGINEER OR ARCHITECT SHALL PREPARE SITE SPECIFIC DOCUMENTS FOR USE WITH THIS DOCUMENT.

HERMES F. NORERO
LICENSE
No. 73778
STATE OF
FLORIDA
PROFESSIONAL ENGINEER

HERMES F. NORERO, P.E.
FLORIDA P.E. No. 73778
BUILDING DROPS, INC
1900 NE MIAMI COURT, STE. 2-15
MIAMI, FL 33132
FBPE CERT. OF AUTHORIZATION No. 29578

FL #: FL16668

DATE: 10.30.13

DWG. BY: MSS | CHK. BY: HFN

SCALE: NTS

DWG. #: YKK023

SHEET: 14 | REV. A

c:\users\sebastianherreros\desktop\ykk 2026 cc\fl16668\ykk023.dwg

7/24/2026 12:37 PM

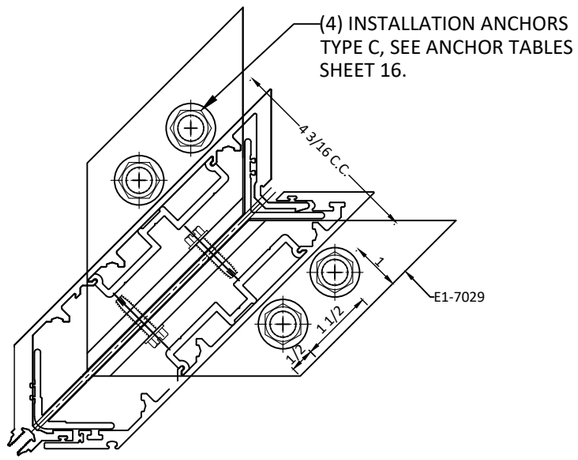

OUTSIDE 90 DEGREE ANCHORS

INTO STEEL SUBSTRATES

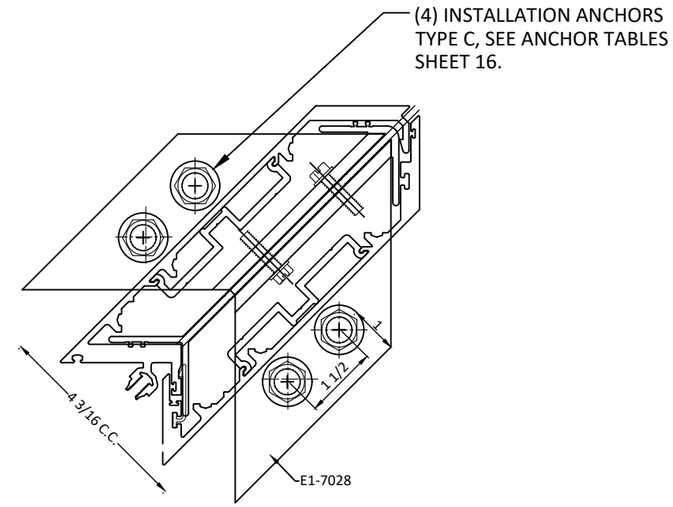

INSIDE 90 DEGREE ANCHORS

INTO STEEL SUBSTRATES

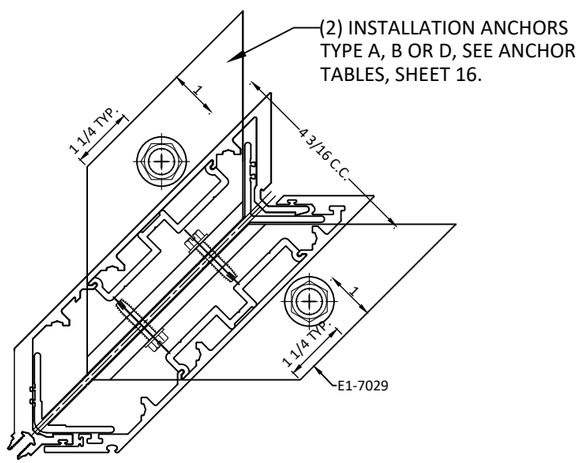

OUTSIDE 90 DEGREE ANCHORS

INTO CONCRETE SUBSTRATES

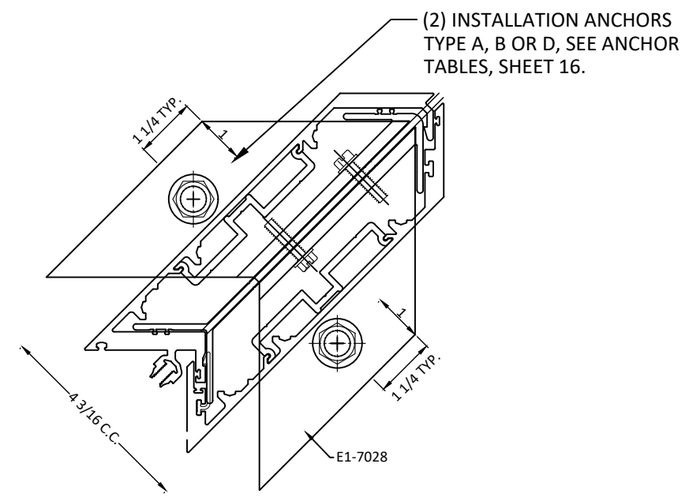

INSIDE 90 DEGREE ANCHORS

INTO CONCRETE SUBSTRATES

YKK AP AMERICA, Inc.
101 MARIETTA STREET NW, SUITE 2100
MIAMI, FL 33132
PH: (478)277-1955 FAX: (678)838-6001

TITLE:
YUW 750 XTH UNITIZED WALL SYSTEM (HVHZ) (S.M.I.)
IS & OS CORNER T-CLIP ANCHOR DETAILS

PREPARED BY:
BUILDING DROPS, INC.
1900 NE MIAMI COURT, STE. 2-15
MIAMI, FL 33132
PH: (954)399-8478
FAX: (954)744.4738
WEB: www.buildingdrops.com

REMARKS	BY	DATE
2026 FBC UPDATE	SH	07.24.26

THE INSTALLATION DETAILS DESCRIBED HEREIN ARE GENERIC AND MAY NOT REFLECT ACTUAL CONDITIONS FOR A SPECIFIC SITE. IF SITE CONDITIONS CAUSE INSTALLATION TO DEVIATE FROM THE REQUIREMENTS DETAILED HEREIN, A LICENSED ENGINEER OR ARCHITECT SHALL PREPARE SITE SPECIFIC DOCUMENTS FOR USE WITH THIS DOCUMENT.

HERMES F. NORERO
LICENSE
No. 73778
STATE OF
FLORIDA
PROFESSIONAL ENGINEER

HERMES F. NORERO, P.E.
FLORIDA P.E. No. 73778
BUILDING DROPS, INC
1900 NE MIAMI COURT, STE. 2-15
MIAMI, FL 33132
FBPE CERT. OF AUTHORIZATION No. 29578

FL #: FL16668

DATE: 10.30.13

DWG. BY: MSS

CHK. BY: HFN

SCALE: NTS

DWG. #: YKK023

SHEET: 15 OF 26

REV. A

c:\users\sebastianherreros\desktop\ykk 2026 cc\fl16668\ykk023.dwg

T, F, & CORNER CLIP ANCHOR TABLES & REQUIREMENTS

ANCHOR OPTION SCHEDULE							
TYPE	DESCRIPTION	MIN. EMBEDMENT	SUBSTRATE	MIN. EDGE DISTANCE	MIN. C.C. SPACING (T-CLIP)	MIN. C.C. SPACING (F-CLIP)	MIN. C.C. SPACING (CORNER-CLIPS)
A	1/2" Ø TAPTITE SELF-THREADING BOLTS	(3) THREADS PENETRATION	1/4" THICK STEEL (MIN. Fy = 36 KSI)	1"	6-1/4"	3"	4-1/8"
B	1/2" Ø HILTI KWIK BOLT 3	2-1/4"	MIN. 3000 PSI CONCRETE	3-3/4"	6-1/4"	3"	4-1/8"
C	3/8" Ø TAPTITE SELF-THREADING BOLTS	(3) THREADS PENETRATION	1/8" THICK STEEL (MIN. Fy = 36 KSI)	3-3/8"	6-1/4"	3"	4-1/8"
D	3/8" Ø HILTI KWIK BOLT 3	1-5/8"	MIN. 3000 PSI CONCRETE	3-3/8"	6-1/4"	3"	4-1/8"

ANCHOR QUANTITY SCHEDULE				
ANCHOR TYPE	QUANTITY			
	TYPE A	TYPE B	TYPE C	TYPE D
F-CLIP	2	2	2	2
T-CLIP	2	2	2	2
INSIDE 90 DEGREE CLIP	2	2	4	2
OUTSIDE 90 DEGREE CLIP	2	2	4	2

DESIGN PRESSURE TABLE: ANCHOR CAPACITY					
MAX. WIDTH 'W'	MAX. SPAN 'H'	MAXIMUM DESIGN PRESSURE PER ANCHOR TYPE (PSF)			
		A	B	C	D
60 1/4"	150"	+/- 80 PSF	+/- 80 PSF	+/- 55 PSF	+/- 55 PSF

T, F, & CORNER CLIP ANCHOR NOTES:

1. REFER TO ANCHOR OPTIONS SCHEDULE FOR ANCHOR SELECTION, SUBSTRATE REQUIREMENTS AND INSTALLATION REQUIREMENTS.
2. REFER TO ANCHOR QUANTITY SCHEDULE FOR NUMBER OF ANCHORS REQUIRED THROUGH EACH ANCHOR CLIP.
3. REFER TO DESIGN PRESSURE TABLE FOR LIMITATIONS IN DESIGN PRESSURE BASED ON ANCHOR SELECTION AND CURTAIN WALL DIMENSIONS. SEE SHEETS 11-13 FOR DETERMINATION OF BAY WIDTH 'W' AND SPAN 'H'.
4. TABLES AT LEFT APPLY TO SINGLE & TWIN SPAN UNITS.
5. REFER TO SHEETS 14-15 FOR APPLICABLE INSTALLATION DETAILS.
6. TABULATED DESIGN PRESSURE VALUES ARE BASED ON ANCHOR CAPACITIES INTO THE SPECIFIED SUBSTRATES SUCH THAT ALL CONDITIONS IN THE ANCHOR SCHEDULE TABLE ARE PROVIDED.
7. FOR SITE CONDITIONS WHICH EXCEED LIMITATIONS SHOWN FURTHER ENGINEERING SHALL BE REQUIRED ON A CASE BY CASE BASIS.

YKK AP AMERICA, Inc.
101 MARIETTA STREET NW, SUITE 2100
MIAMI, FL 33132
PH: (478)277-1955 FAX: (678)838-6001

TITLE: YUW 750 XTH UNITIZED WALL SYSTEM (HVHZ) (S.M.I.)
T, F, & CORNER CLIP ANCHOR TABLES

PREPARED BY: BUILDING DROPS, INC.
1900 NE MIAMI COURT, STE. 2-15
MIAMI, FL 33132
PH: (954)399-8478
FAX: (954)744.4738
WEB: www.buildingdrops.com

REMARKS	BY	DATE
2026 FBC UPDATE	SH	07.24.26

THE INSTALLATION DETAILS DESCRIBED HEREIN ARE GENERIC AND MAY NOT REFLECT ACTUAL CONDITIONS FOR A SPECIFIC SITE. IF SITE CONDITIONS CAUSE INSTALLATION TO DEVIATE FROM THE REQUIREMENTS DETAILED HEREIN, A LICENSED ENGINEER OR ARCHITECT SHALL PREPARE SITE SPECIFIC DOCUMENTS FOR USE WITH THIS DOCUMENT.

HERMES F. NORERO LICENSE No. 73778 STATE OF FLORIDA PROFESSIONAL ENGINEER

HERMES F. NORERO, P.E.
FLORIDA P.E. No. 73778
BUILDING DROPS, INC
1900 NE MIAMI COURT, STE. 2-15
MIAMI, FL 33132
FBPE CERT. OF AUTHORIZATION No. 29578

FL #: FL16668

DATE: 10.30.13

DWG. BY: MSS | CHK. BY: HFN

SCALE: NTS

DWG. #: YKK023

SHEET: 16 | REV. A

7/24/2026 12:37 PM
c:\users\sebastianherreros\desktop\ykk 2026 cc\fl16668\ykk023.dwg

DEAD LOAD L-ANCHOR TABLE & REQUIREMENTS

ANCHOR OPTION SCHEDULE: DEAD LOAD L-ANCHORS					
TYPE	DESCRIPTION	MIN. EMBEDMENT	SUBSTRATE	MIN. EDGE DISTANCE	MIN. C.C. SPACING
E	1/2" Ø TAPTITE SELF-THREADING BOLTS	(3) THREADS PENETRATION	1/4" THICK STEEL (MIN. Fy = 36 KSI)	1"	5"
F	1/2" Ø HILTI HIT-HY 150 MAX ADHESIVE AND HAS ASTM A193 B7 ROD WITH NUT & WASHER	4-1/2"	MIN. 4000 PSI CONCRETE	5"	5-1/2"

DEAD LOAD L-ANCHOR NOTES:

1. REFER TO ANCHOR OPTIONS SCHEDULE FOR ANCHOR SELECTION, SUBSTRATE REQUIREMENTS AND INSTALLATION REQUIREMENTS.
2. TWO (2) INSTALLATION ANCHORS PER L-CLIP (E1-3907) SHALL BE USED.
3. REFER TO DESIGN PRESSURE TABLE, SHEET 13, FOR TWIN SPAN DESIGN PRESSURES, MAX. SUPPORT SPANS, & BAY WIDTHS.
4. REFER TO SHEETS 17-20 FOR APPLICABLE INSTALLATION DETAILS.
5. TABULATED DESIGN PRESSURE VALUES ARE BASED ON ANCHOR CAPACITIES INTO THE SPECIFIED SUBSTRATES SUCH THAT ALL CONDITIONS IN THE ANCHOR SCHEDULE TABLE ARE PROVIDED.
6. FOR SITE CONDITIONS WHICH EXCEED LIMITATIONS SHOWN FURTHER ENGINEERING SHALL BE REQUIRED ON A CASE BY CASE BASIS.

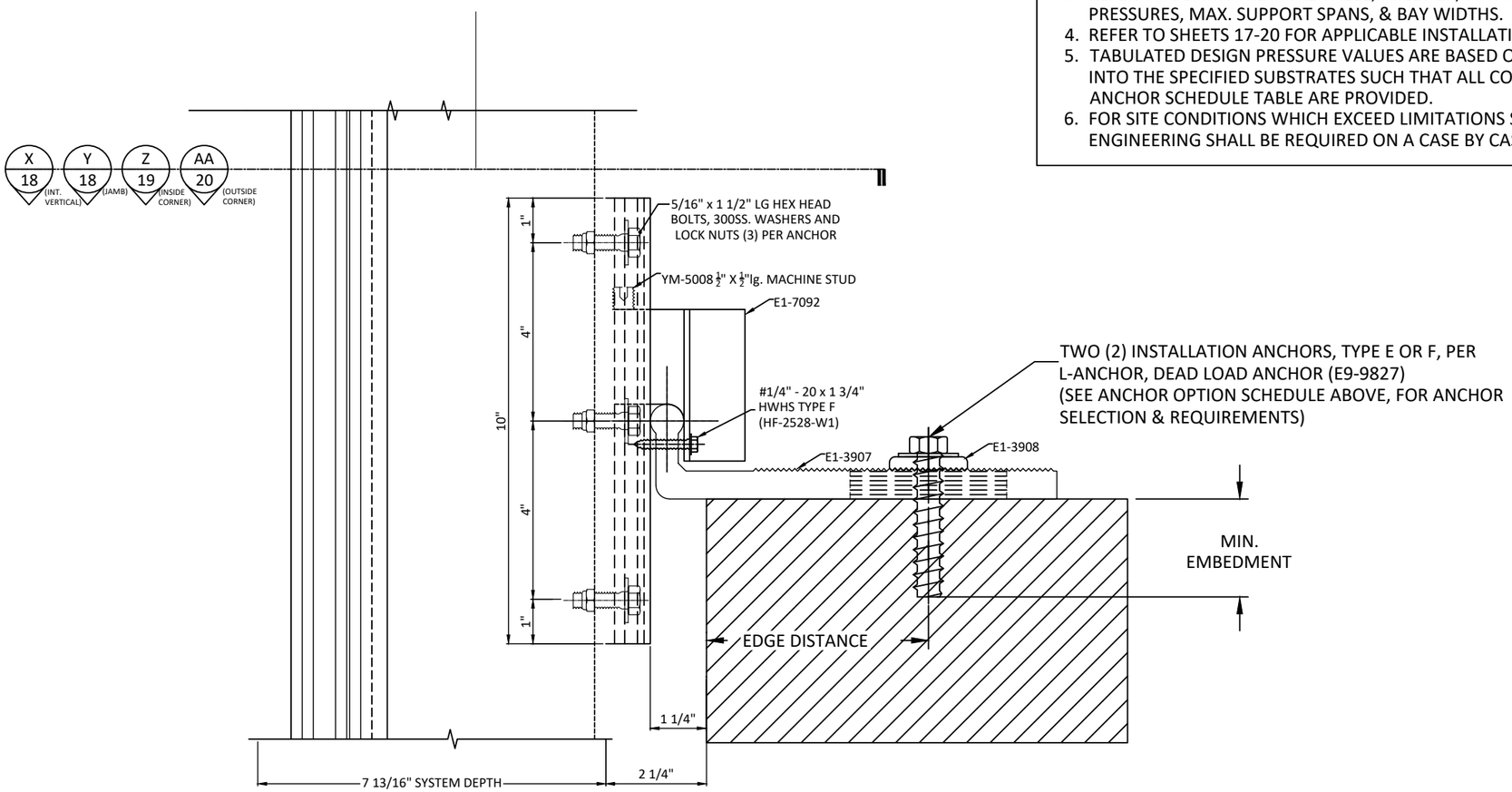

W 17

VERTICAL SECTION

DEAD LOAD L-ANCHOR
TYP.

YKK AP AMERICA, Inc.
101 MARIETTA STREET NW, SUITE 2100
MIAMI, FL 33132
PH: (478)277-1955 FAX: (678)838-6001

TITLE: YUW 750 XTH UNITIZED WALL SYSTEM (HVHZ) (S.M.I.)
L-ANCHOR DETAIL
DEAD LOAD ANCHOR TABLE

PREPARED BY: BUILDING DROPS, INC.
1900 NE MIAMI COURT, STE. 2-15
MIAMI, FL 33132
PH: (954)399-8478
FAX: (954)744.4738
WEB: www.buildingdrops.com

REMARKS	BY	DATE
2026 FBC UPDATE	SH	07.24.26

THE INSTALLATION DETAILS DESCRIBED HEREIN ARE GENERIC AND MAY NOT REFLECT ACTUAL CONDITIONS FOR A SPECIFIC SITE. IF SITE CONDITIONS CAUSE INSTALLATION TO DEVIATE FROM THE REQUIREMENTS DETAILED HEREIN, A LICENSED ENGINEER OR ARCHITECT SHALL PREPARE SITE SPECIFIC DOCUMENTS FOR USE WITH THIS DOCUMENT.

HERMES F. NORERO LICENSE No. 73778 STATE OF FLORIDA PROFESSIONAL ENGINEER

HERMES F. NORERO, P.E.
FLORIDA LICENSE No. 73778
BUILDING DROPS, INC
1900 NE MIAMI COURT, STE. 2-15
MIAMI, FL 33132
FBPE CERT. OF AUTHORIZATION No. 29578

FL #: FL16668

DATE: 10.30.13

DWG. BY: MSS

CHK. BY: HFN

SCALE: NTS

DWG. #: YKK023

SHEET: 17 OF 26

REV. A

7/24/2026 12:37 PM
c:\users\sebastianherreros\desktop\ykk 2026 cx\fl16668\ykk023.dwg

7/24/2026 12:37 PM

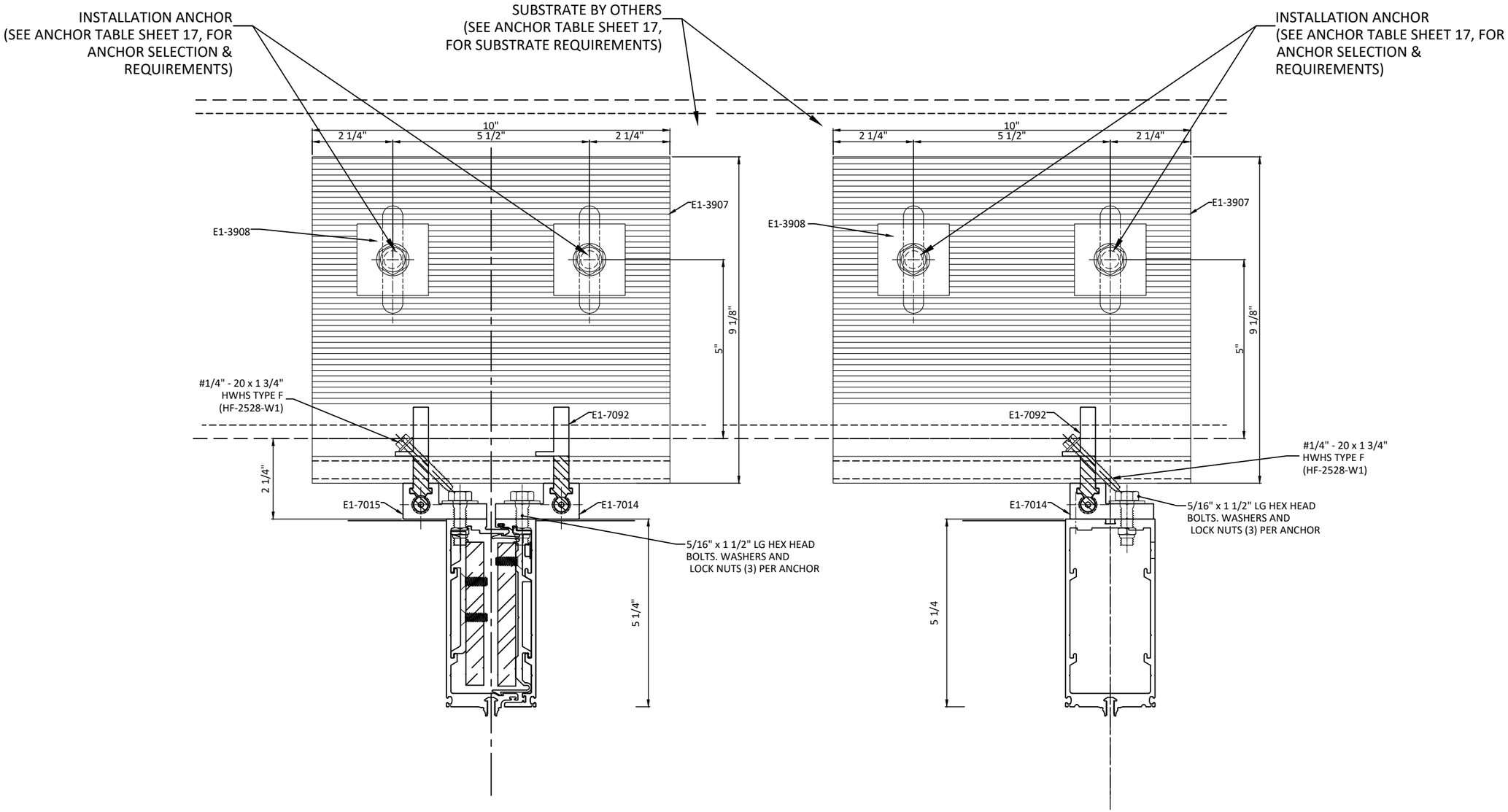

X/18 HORIZONTAL SECTION

DEAD LOAD L-ANCHOR
INTERMEDIATE VERTICAL MULLION

Y/18 HORIZONTAL SECTION

DEAD LOAD L-ANCHOR
JAMB VERTICAL

YKK AP AMERICA, Inc.
101 MARIETTA STREET NW, SUITE 2100
MIAMI, FL 33132
PH: (478)277-1955 FAX: (678)838-6001

TITLE:
YUW 750 XTH UNITIZED WALL SYSTEM (HVHZ) (S.M.I.)
HORIZONTAL SECTION - L-ANCHOR
INT. VERTICAL & JAMBS

PREPARED BY:
BUILDING DROPS, INC.
1900 NE MIAMI COURT, STE. 2-15
MIAMI, FL 33132
PH: (954)399-8478
FAX: (954)744.4738
WEB: www.buildingdrops.com

REMARKS	BY	DATE
2026 FBC UPDATE	SH	07.24.26

THE INSTALLATION DETAILS DESCRIBED HEREIN ARE GENERIC AND MAY NOT REFLECT ACTUAL CONDITIONS FOR A SPECIFIC SITE. IF SITE CONDITIONS CAUSE INSTALLATION TO DEVIATE FROM THE REQUIREMENTS DETAILED HEREIN, A LICENSED ENGINEER OR ARCHITECT SHALL PREPARE SITE SPECIFIC DOCUMENTS FOR USE WITH THIS DOCUMENT.

HERMES F. NORERO
LICENSE
No. 73778
STATE OF
FLORIDA
PROFESSIONAL ENGINEER

HERMES F. NORERO, P.E.
FLORIDA P.E. No. 73778
BUILDING DROPS, INC
1900 NE MIAMI COURT, STE. 2-15
MIAMI, FL 33132
FBPE CERT. OF AUTHORIZATION No. 29578

FL #: FL16668

DATE: 10.30.13

DWG. BY: MSS | CHK. BY: HFN

SCALE: NTS

DWG. #: YKK023

SHEET: 18 | REV. A

c:\users\sebastianherreros\desktop\ykk 2026 cc\f16668\ykk023.dwg

7/24/2026 12:37 PM

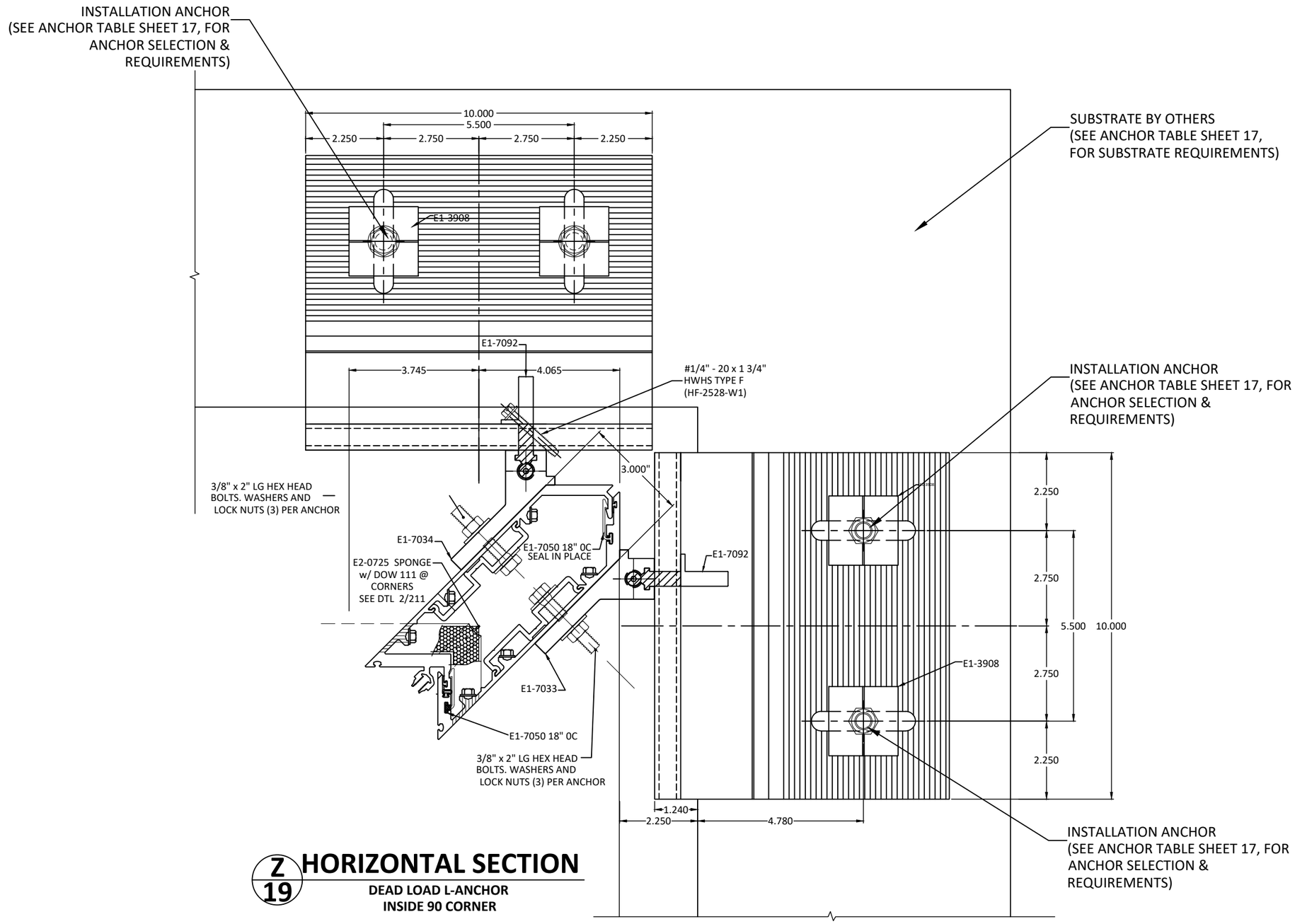

Z 19 HORIZONTAL SECTION

DEAD LOAD L-ANCHOR
INSIDE 90 CORNER

YKK AP AMERICA, Inc.
101 MARIETTA STREET NW, SUITE 2100
MIAMI, FL 33132
PH: (478)277-1955 FAX: (678)838-6001

TITLE: YUW 750 XTH UNITIZED WALL SYSTEM (HVHZ) (S.M.I.)
HORIZONTAL SECTION - L-ANCHORS INSIDE 90 CORNER

PREPARED BY:
BUILDING DROPS, INC.
1900 NE MIAMI COURT, STE. 2-15
MIAMI, FL 33132
PH: (954)399-8478
FAX: (954)744.4738
WEB: www.buildingdrops.com

REMARKS	BY	DATE
2026 FBC UPDATE	SH	07.24.26

THE INSTALLATION DETAILS DESCRIBED HEREIN ARE GENERIC AND MAY NOT REFLECT ACTUAL CONDITIONS FOR A SPECIFIC SITE. IF SITE CONDITIONS CAUSE INSTALLATION TO DEVIATE FROM THE REQUIREMENTS DETAILED HEREIN, A LICENSED ENGINEER OR ARCHITECT SHALL PREPARE SITE SPECIFIC DOCUMENTS FOR USE WITH THIS DOCUMENT.

HERMES F. NORERO LICENSE No. 73778 STATE OF FLORIDA PROFESSIONAL ENGINEER

HERMES F. NORERO, P.E.
FLORIDA LIC. No. 73778
BUILDING DROPS, INC
1900 NE MIAMI COURT, STE. 2-15
MIAMI, FL 33132
FBPE CERT. OF AUTHORIZATION No. 29578

FL #: FL16668

DATE: 10.30.13

DWG. BY: MSS | CHK. BY: HFN

SCALE: NTS

DWG. #: YKK023

SHEET: 19 OF 26 | REV. A

c:\users\sebastianherreros\desktop\ykk 2026 cc\fl16668\ykk023.dwg

7/24/2026 12:37 PM

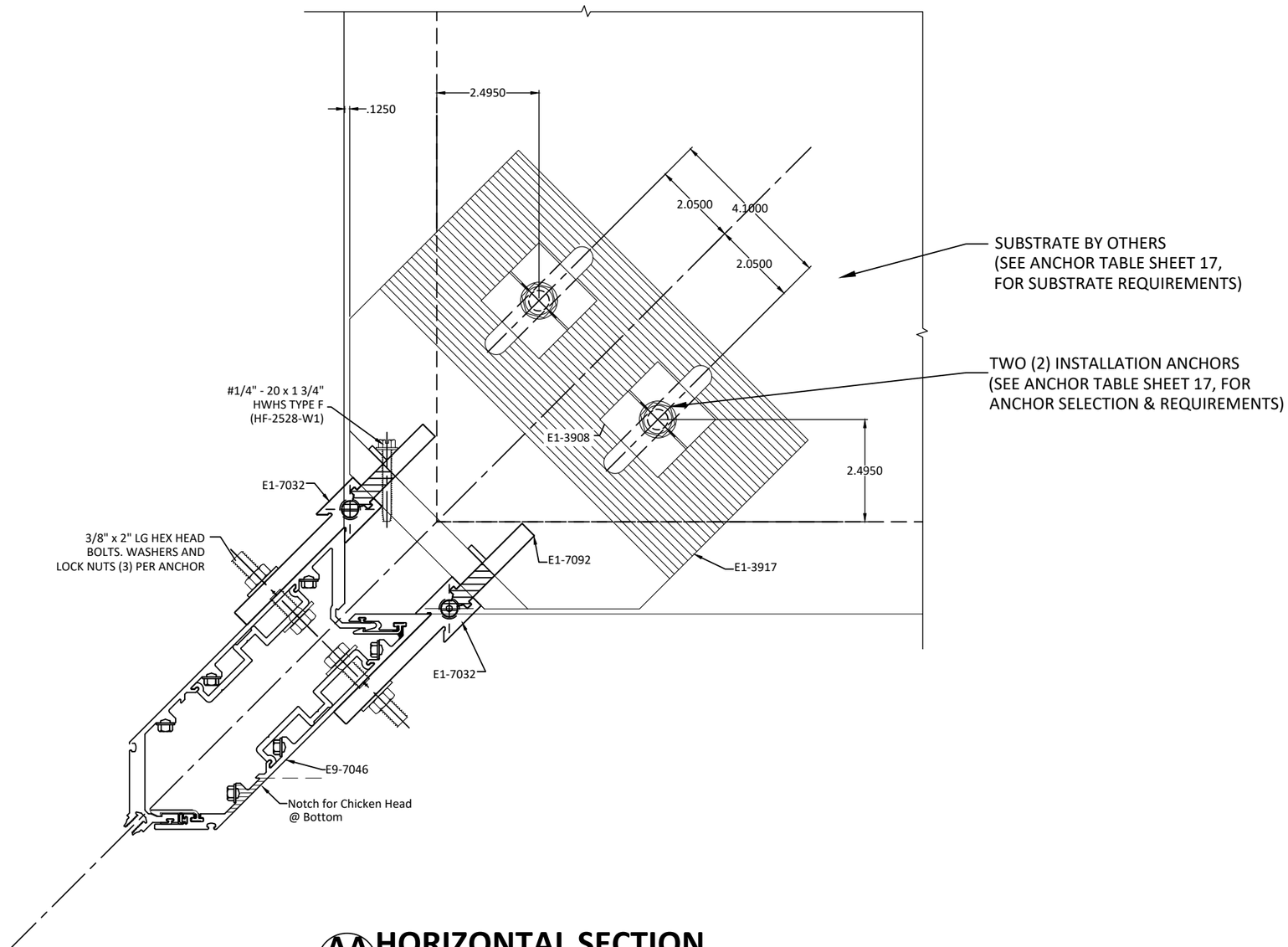

AA 20 HORIZONTAL SECTION

DEAD LOAD L-ANCHOR
OUTSIDE 90 CORNER

YKK AP AMERICA, Inc.
101 MARIETTA STREET NW, SUITE 2100
MIAMI, FL 33132
PH: (478)277-1955 FAX: (678)838-6001

TITLE:
YUW 750 XTH UNITIZED WALL SYSTEM
(HVHZ) (S.M.I.)
HORIZONTAL SECTION - L-ANCHORS
OUTSIDE 90 CORNER

PREPARED BY:
BUILDING DROPS, INC.
1900 NE MIAMI COURT, STE. 2-15
MIAMI, FL 33132
PH: (954)399-8478
FAX: (954)744.4738
WEB: www.buildingdrops.com

REMARKS	BY	DATE
2026 FBC UPDATE	SH	07.24.26

THE INSTALLATION DETAILS DESCRIBED HEREIN ARE GENERIC AND MAY NOT REFLECT ACTUAL CONDITIONS FOR A SPECIFIC SITE. IF SITE CONDITIONS CAUSE INSTALLATION TO DEVIATE FROM THE REQUIREMENTS DETAILED HEREIN, A LICENSED ENGINEER OR ARCHITECT SHALL PREPARE SITE SPECIFIC DOCUMENTS FOR USE WITH THIS DOCUMENT.

HERMES F. NORERO
LICENSE
No. 73778
STATE OF
FLORIDA
PROFESSIONAL ENGINEER

HERMES F. NORERO, P.E.
BUILDING DROPS, INC
1900 NE MIAMI COURT, STE. 2-15
MIAMI, FL 33132
FBPE CERT. OF AUTHORIZATION No. 29578

FL #: FL16668

DATE: 10.30.13

DWG. BY: MSS | CHK. BY: HFN

SCALE: NTS

DWG. #: YKK023

SHEET: 20 | REV. A

OF 26

c:\users\sebastianherreros\desktop\ykk 2026 cc\fl16668\ykk023.dwg

7/24/2026 12:37 PM

c:\users\sebastianherreros\desktop\ykk 2026 cc\fl16668\ykk023.dwg

BILL OF MATERIALS

Extrusion #/ Part #	Description	Material	Manufacturer
AS-7057	Pressure Plate (1 5/16" Glass)	6063-T5	YKK AP
AS-7081	90 Deg. Outside Corner Pressure Plate (1 5/16" Glass)	6063-T5	YKK AP
E9-1206	Face Cover	6063-T5	YKK AP
E9-3839	Right Angle Bracket	6063-T6	YKK AP
E9-7002	5 1/4" Female Mullion Half	6063-T5	YKK AP
E9-7003	5 1/4" Interlocking Clip	6063-T5	YKK AP
E9-7021	5 1/4" Mullion Sleeve	6063-T5	YKK AP
E9-7023	5 1/4" SSG Sill/Horizontal	6063-T5	YKK AP
E9-7027	5 1/4" Head/Horizontal	6063-T5	YKK AP
E9-7039	SSG Setting Block Chair (1 5/16" Glass)	6063-T5	YKK AP
E9-7040	Setting Block Chair (1 5/16" Glass)	6063-T5	YKK AP
E9-7042	5 1/4" Anchor Sleeve	6063-T5	YKK AP
E9-7044	5 1/4" Flush Filler	6063-T5	YKK AP
E9-7045	5 1/4" Outside Corner Male Mullion	6063-T5	YKK AP
E9-7046	5 1/4" Outside Corner Female Mullion	6063-T5	YKK AP
E9-7047	5 1/4" Inside Corner Male Mullion	6063-T5	YKK AP
E9-7048	5 1/4" Inside Corner Female Mullion	6063-T5	YKK AP
E9-7049	5 1/4" Corner Sleeve	6063-T5	YKK AP
E9-7050	Corner Anti-Buckling Clip	6063-T5	YKK AP
E9-7056	90 Deg. Outside Corner Cover	6063-T5	YKK AP
E9-7080	90 Deg. Outside Corner Face Cover (1 5/16" Glass)	6063-T5	YKK AP
E9-7092	Bracket Sleeve	6063-T6	YKK AP
E9-7093	5 1/4" Corner Anchor Sleeve	6063-T5	YKK AP
E9-7094	5 1/4" Sill Track	6063-T5	YKK AP
E9-7095	5 1/4" Male Mullion Half	6063-T5	YKK AP
E9-7096	5 1/4" Sill/Horizontal	6063-T5	YKK AP
E9-7097	5 1/4" Intermediate Horizontal	6063-T5	YKK AP
E9-7098	5 1/4" Jamb Mullion	6063-T5	YKK AP
E9-7099	5 1/4" Open Back Head/Sill	6063-T5	YKK AP
E9-7749	1/4" Adaptor	6063-T5	YKK AP
E2-7018	Glazing Filler	6063-T5	YKK AP
E1-3907	L-Anchor	6063-T6	YKK AP
E1-3908	Lock Washer	6063-T6	YKK AP
E1-7001	Stack Joint Plate	6063-T5	YKK AP
E1-7002	End Dam	6063-T5	YKK AP
E1-7003	5 1/4" Mullion Clip	6063-T5	YKK AP
E1-7004	Mullion Anchor (Curtain Wall)	6063-T6	YKK AP

BILL OF MATERIALS (Continued)

Extrusion #/ Part #	Description	Material	Manufacturer
E1-7005	Jamb Anchor (Curtain Wall)	6063-T6	YKK AP
E1-7006	5 1/4" Mullion Anchor Sleeve	6063-T5	YKK AP
E1-7007	5 1/4" Mullion Reinforcement Clip	6063-T5	YKK AP
E1-7008	End Cap (Window Wall)	6063-T5	YKK AP
E1-7009	Setting Block Chair (1" Glass)	6063-T5	YKK AP
E1-7010	Setting Block Chair (1 5/16" Glass)	6063-T5	YKK AP
E1-7011	SSG Setting Block Chair (1 5/16" Glass)	6063-T5	YKK AP
E1-7014	RH Mullion Anchor	6063-T6	YKK AP
E1-7015	LH Mullion Anchor	6063-T6	YKK AP
E1-7016	SSG Setting Block Chair (1" Glass)	6063-T5	YKK AP
E1-7021	5 1/4" RH Mullion Sleeve	6063-T5	YKK AP
E1-7022	5 1/4" LH Mullion Sleeve	6063-T5	YKK AP
E1-7024	Mullion T-Anchor (Window Wall)	6063-T6	YKK AP
E1-7025	Jamb F-Anchor (Window Wall)	6063-T6	YKK AP
E1-7027	Corner Starter Sill Splice	6063-T5	YKK AP
E1-7028	90 Deg Inside Corner Anchor	6063-T5	YKK AP
E1-7029	90 Deg Outside Corner Anchor	6063-T5	YKK AP
E1-7032	90 Deg. Outside Corner Mullion Anchor	6063-T6	YKK AP
E1-7033	90 Deg. Outside Corner LH Mullion Anchor	6063-T6	YKK AP
E1-7034	90 Deg. Inside Corner LH Mullion Anchor	6063-T6	YKK AP
E1-7048	5 1/4" RH Corner Mullion Splice Sleeve	6063-T5	YKK AP
E1-7049	5 1/4" LH Corner Mullion Splice Sleeve	6063-T5	YKK AP
E1-7050	Corner Mullion Clip	6063-T5	YKK AP
E1-7067	Horizontal SSG Setting Block Chair	6063-T5	YKK AP
E1-7081	Jamb Stack Joint Angle	6063-T5	YKK AP
E1-7092	Bracket Sleeve	6063-T5	YKK AP
E2-0070	Silicone Sheet	SILICONE	TREMCO
E2-0110	1/4" x 1/4" Glazing Tape	SGT-922 POLYURETHANE FOAM	TAPE SPECIALITIES
E2-0724	1/4" x 3/16" Glazing Tape	SGT-922 POLYURETHANE FOAM	TAPE SPECIALITIES
E2-0725	Closed Cell Sponge	ARMAFLEX HP	TAPE SPECIALITIES
E2-3906	Horizontal Tight Spacer	PROVISTA	TREMCO
E2-7001	Interior Gasket	"SILICONE (DUROMETER 70 +/-5)"	TREMCO
E2-7002	Air Water Seal Gasket	SILICONE	TREMCO
E2-7003	Horizontal Exterior Gasket	"SILICONE (DUROMETER 60 +/-5)"	TREMCO
E2-7004	Horizontal Air Seal Gasket	SILICONE	TREMCO
E2-7005	Exterior Gasket	"SILICONE (DUROMETER 70 +/-5)"	TREMCO

BILL OF MATERIALS (Continued)

Extrusion #/ Part #	Description	Material	Manufacturer
E2-7006	Setting Block (1" Glass)	SILICONE	LAUREN
E2-7008	Wiper Gasket	SILICONE	TREMCO
E2-7009	SSG Wiper Gasket	SILICONE	TREMCO
E2-7010	Weather Seal Gasket	SILICONE	TREMCO
E2-7011	SSG Setting Block	SILICONE	LAUREN
E2-7012	Captured Joint Plug	EPDM SPONGE	TAPE SPECIALITIES
E2-7013	SSG Joint Plug	EPDM SPONGE	TAPE SPECIALITIES
E2-7014	SSG Corner Spacer	"SILICONE (DUROMETER 70 +/-5)"	TREMCO
E2-7016	Sill Horizontal Weather Seal	SILICONE	LAUREN
E2-7017	1 5/16 Setting Block SSG	SILICONE	LAUREN
E2-7018	1 5/16 Setting Block Captured	SILICONE	LAUREN
E3-7011	SSG Corner Tongue Adaptor	PVC	AMESBURY
E3-7013	SSG Tongue Adaptor	PVC	AMESBURY
E3-7015	Perimeter Spacer (1 5/16" Glass)	PVC	AMESBURY
E3-7016	Thermal Shield (1 5/16" Glass)	PVC	AMESBURY
E3-7017	Polyamide Tongue Adaptor	POLYAMIDE	TECHNOFORM
E3-7018	Glass Edge Protector (1 5/16" Glass)	PVC	AMESBURY
E3-7019	PVC End Cap	M&M PLASTICS	BLACK NYLON
E3-7020	SSG Tongue Adaptor	PVC	AMESBURY
E3-7023	Sill Track Adaptor	PVC	AMESBURY
E3-7024	PVC End Cap	M&M PLASTICS	BLACK NYLON
E3-9902	SSG Tongue Adaptor	PVC	AMESBURY
E3-9903	Glass Edge Protector	PVC	AMESBURY
HC1220-SS	#12x 1.25 HWH type C	300 Stainlesss Steel	Fastenal
HC1228-SS	#12x 1.75 HWH type C	300 Stainlesss Steel	Fastenal
HW2532-SS	1/4-20 x 2" HWH Machine scrww	300 Stainlesss Steel	Fastenal
FC2512-SS	1/4-20 x 3/4" FH Machine screw	300 Stainlesss Steel	Fastenal
FC1010-SS	#12x 1.25 HWH type C	300 Stainlesss Steel	Fastenal
FC2524-SS	1/4-20 x 1.5" FH Machine screw	300 Stainlesss Steel	Fastenal
FC2524-SS	1/4-20 x 1.5" FH Machine screws/ bolts	300 Stainlesss Steel	Fastenal
HF2516-W1	1/4-20 x 1" Machine screws	Carbon Steel	Fastenal
HF2528-W1	1/4-20 x 1.75" Machine screws	Carbon Steel	Fastenal
	Dow 995 Silicone Sealant	Silicone	Dow Corning
	Spectrum 2 Silicone sealant	Silicone	Tremco
	ETA silicone Sheet	Silicone	Tremco
	5/16" x 1/5 lg HH bolts, washers and locknuts	300 Stainlesss Steel	Fastenal

YKK AP Quality inspires

YKK AP AMERICA, Inc.
101 MARIETTA STREET NW, SUITE 2100
MIAMI, FL 33132
PH: (478)277-1955 FAX: (678)838-6001

TITLE: YUW 750 XTH UNITIZED WALL SYSTEM (HVHZ) (S.M.I.)
BILLOF MATERIALS

PREPARED BY:
BUILDING DROPS, INC.
1900 NE MIAMI COURT, STE. 2-15
MIAMI, FL 33132
PH: (954)399-8478
FAX: (954)744.4738
WEB: www.buildingdrops.com
BUILDING DROPS

REMARKS	BY	DATE
2026 FBC UPDATE	SH	07.24.26

THE INSTALLATION DETAILS DESCRIBED HEREIN ARE GENERIC AND MAY NOT REFLECT ACTUAL CONDITIONS FOR A SPECIFIC SITE. IF SITE CONDITIONS CAUSE INSTALLATION TO DEVIATE FROM THE REQUIREMENTS DETAILED HEREIN, A LICENSED ENGINEER OR ARCHITECT SHALL PREPARE SITE SPECIFIC DOCUMENTS FOR USE WITH THIS DOCUMENT.

HERMES F. NORERO LICENSE No. 73778 STATE OF FLORIDA PROFESSIONAL ENGINEER

HERMES F. NORERO, P.E.
FLORIDA P.E. No. 73778
BUILDING DROPS, INC
1900 NE MIAMI COURT, STE. 2-15
MIAMI, FL 33132
FBPE CERT. OF AUTHORIZATION No. 29578

FL #: FL16668

DATE: 10.30.13

DWG. BY: MSS | CHK. BY: HFN

SCALE: NTS

DWG. #: YKK023

SHEET: 21 | REV. A

PRESSURE PLATE (1-5/16" GLASS)
AS-7057

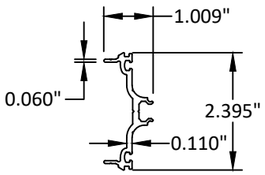

90 DEG. OUTSIDE CORNER PRESSURE PLATE (1 5/16" GLASS)
AS-7081

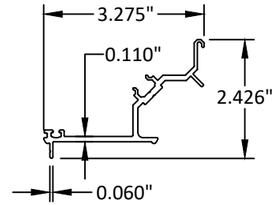

FACE COVER
E9-1206

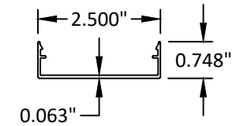

5 1/4" FEMALE MULLION HALF
E9-7002

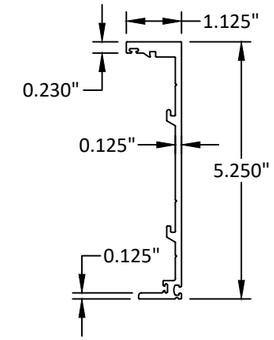

5 1/4" INTERLOCKING CLIP
E9-7003

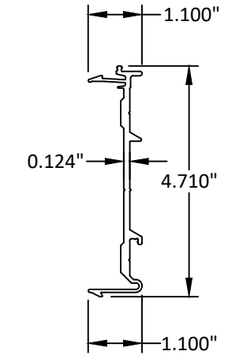

5 1/4" SSG SILL/HORIZONTAL
E9-7023

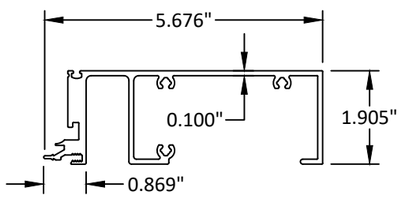

5 1/4" HEAD/HORIZONTAL
E9-7027

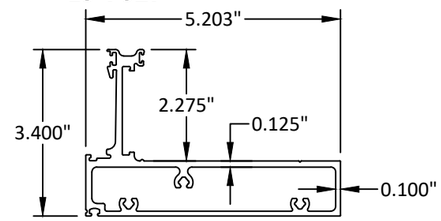

5 1/4" ANCHOR SLEEVE
E9-7042

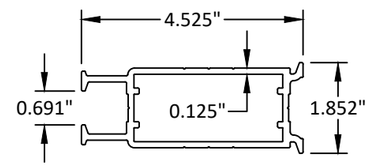

5 1/4" FLUSH FILLER
E9-7044

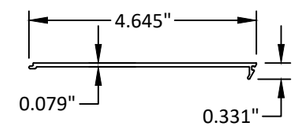

5 1/4" OUTSIDE CORNER MALE MULLION
E9-7045

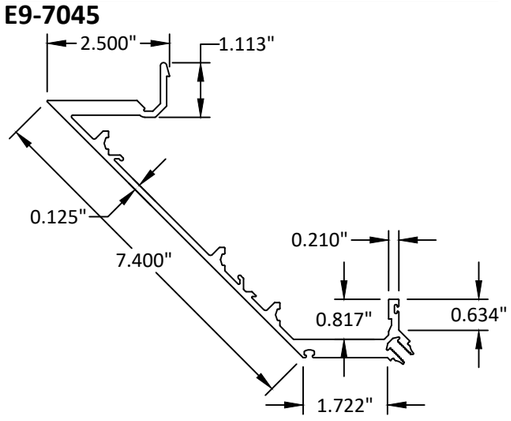

5 1/4" OUTSIDE CORNER FEMALE MULLION
E9-7046

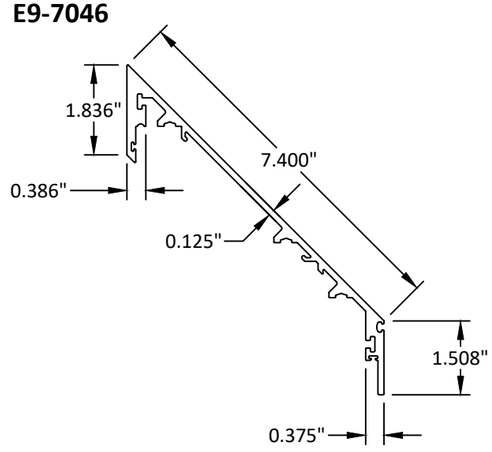

5 1/4" INSIDE CORNER MALE MULLION
E9-7047

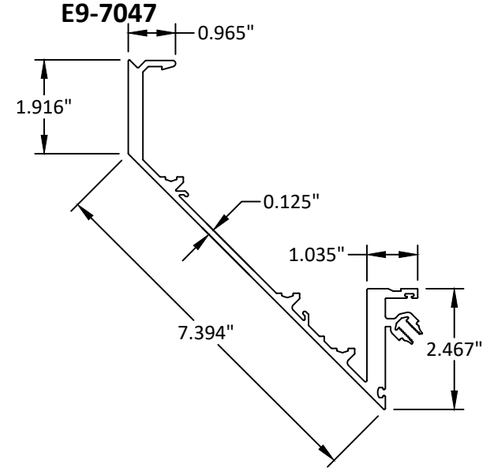

5 1/4" INSIDE CORNER FEMALE MULLION
E9-7048

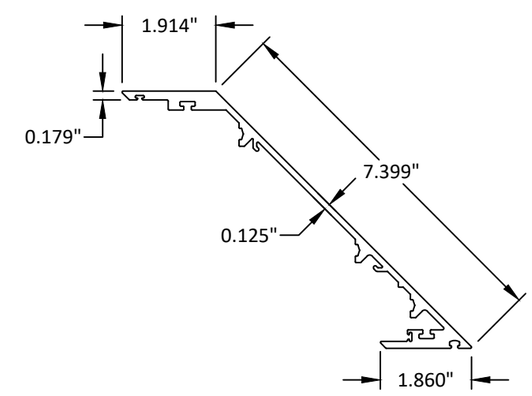

YKK AP AMERICA, Inc.
101 MARIETTA STREET NW, SUITE 2100
MIAMI, FL 33132
PH: (478)277-1955 FAX: (678)838-6001

TITLE: YUW 750 XTH UNITIZED WALL SYSTEM (HVHZ) (S.M.I.) COMPONENTS (1)

PREPARED BY: BUILDING DROPS, INC.
1900 NE MIAMI COURT, STE. 2-15
MIAMI, FL 33132
PH: (954)399-8478
FAX: (954)744.4738
WEB: www.buildingdrops.com

REMARKS	BY	DATE
2026 FBC UPDATE	SH	07.24.26

THE INSTALLATION DETAILS DESCRIBED HEREIN ARE GENERIC AND MAY NOT REFLECT ACTUAL CONDITIONS FOR A SPECIFIC SITE. IF SITE CONDITIONS CAUSE INSTALLATION TO DEVIATE FROM THE REQUIREMENTS DETAILED HEREIN, A LICENSED ENGINEER OR ARCHITECT SHALL PREPARE SITE SPECIFIC DOCUMENTS FOR USE WITH THIS DOCUMENT.

HERMES F. NORERO LICENSE No. 73778 STATE OF FLORIDA PROFESSIONAL ENGINEER

HERMES F. NORERO, P.E.
LICENSE No. 73778
BUILDING DROPS, INC
1900 NE MIAMI COURT, STE. 2-15
MIAMI, FL 33132
FBPE CERT. OF AUTHORIZATION No. 29578

FL #: FL16668

DATE: 10.30.13

DWG. BY: MSS | CHK. BY: HFN

SCALE: NTS

DWG. #: YKK023

SHEET: 22 OF 26 | REV. A

7/24/2026 12:37 PM
c:\users\sebastianherreros\desktop\ykk 2026 cc\fl16668\ykk023.dwg

5 1/4" CORNER SLEEVE
E9-7049

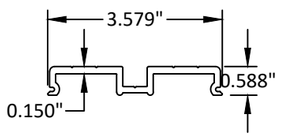

CORNER ANTI-BUCKLING CLIP
E9-7050

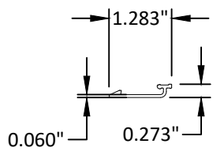

90 DEG. OUTSIDE CORNER COVER
E9-7056

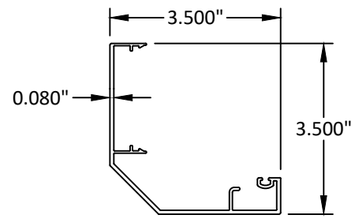

90 DEG. OUTSIDE CORNER FACE COVER (1 5/16" GLASS)
E9-7080

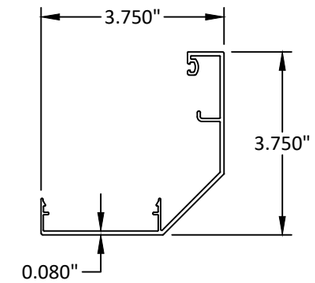

BRACKET SLEEVE
E9-7092

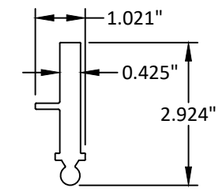

5 1/4" CORNER ANCHOR SLEEVE
E9-7093

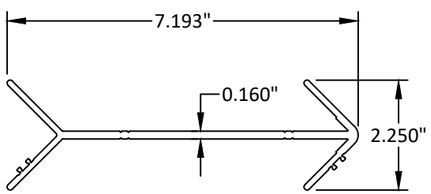

5 1/4" SILL TRACK
E9-7094

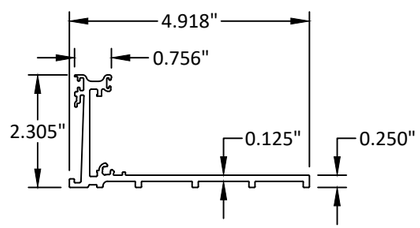

5 1/4" MALE MULLION HALF
E9-7095

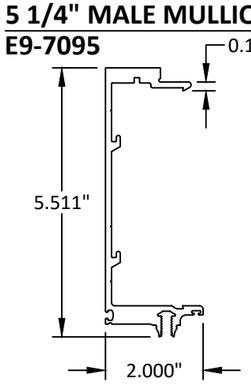

5 1/4" SILL/HORIZONTAL
E9-7096

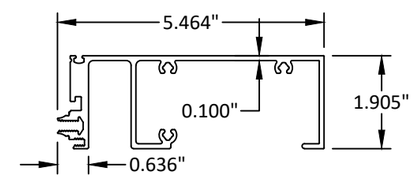

GLAZING FILLER
E2-7018

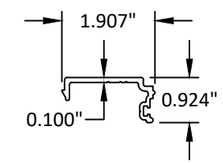

5 1/4" INTERMEDIATE HORIZONTAL
E9-7097

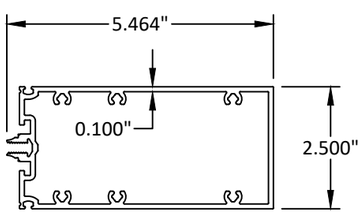

5 1/4" JAMB MULLION
E9-7098

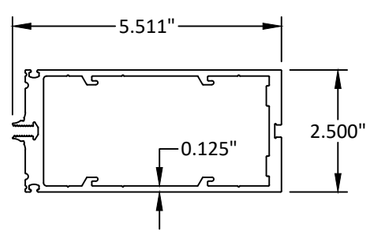

5 1/4" OPEN BACK HEAD/SILL
E9-7099

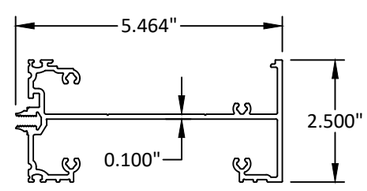

1/4" ADAPTOR
E9-7749

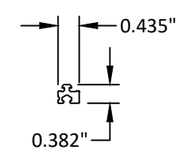

YKK AP AMERICA, Inc.
101 MARIETTA STREET NW, SUITE 2100
MIAMI, FL 33132
PH: (478)277-1955 FAX: (678)838-6001

TITLE: YUW 750 XTH UNITIZED WALL SYSTEM (HVHZ) (S.M.I.) COMPONENTS (2)

PREPARED BY: BUILDING DROPS, INC.
1900 NE MIAMI COURT, STE. 2-15
MIAMI, FL 33132
PH: (954)399-8478
FAX: (954)744.4738
WEB: www.buildingdrops.com

REMARKS	BY	DATE
2026 FBC UPDATE	SH	07.24.26

THE INSTALLATION DETAILS DESCRIBED HEREIN ARE GENERIC AND MAY NOT REFLECT ACTUAL CONDITIONS FOR A SPECIFIC SITE. IF SITE CONDITIONS CAUSE INSTALLATION TO DEVIATE FROM THE REQUIREMENTS DETAILED HEREIN, A LICENSED ENGINEER OR ARCHITECT SHALL PREPARE SITE SPECIFIC DOCUMENTS FOR USE WITH THIS DOCUMENT.

HERMES F. NORERO LICENSE No. 73778 STATE OF FLORIDA PROFESSIONAL ENGINEER

HERMES F. NORERO, P.E.
FLORIDA P.E. No. 73778
BUILDING DROPS, INC
1900 NE MIAMI COURT, STE. 2-15
MIAMI, FL 33132
FBPE CERT. OF AUTHORIZATION No. 29578

FL #: FL16668

DATE: 10.30.13

DWG. BY: MSS | CHK. BY: HFN

SCALE: NTS

DWG. #: YKK023

SHEET: 23 OF 26 | REV. A

7/24/2026 12:37 PM
c:\users\sebastianherreros\desktop\ykk 2026 cc\fl16668\ykk023.dwg

7/24/2026 12:37 PM

L-ANCHOR
E1-3907

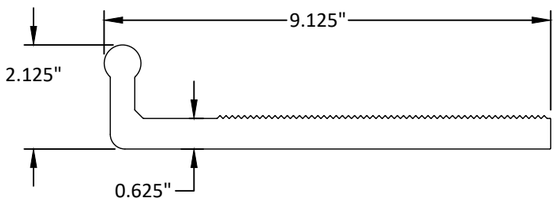

LOCK WASHER
E1-3908

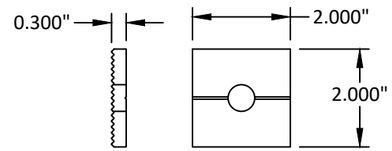

5 1/4" MULLION CLIP
E1-7003

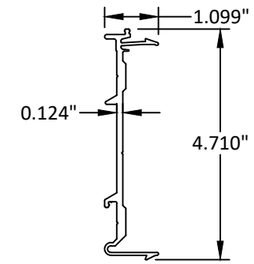

MULLION ANCHOR (CURTAIN WALL)
E1-7004
MULLION T-ANCHOR (WINDOW WALL)
E1-7024

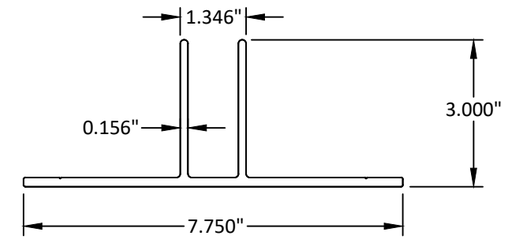

JAMB ANCHOR (CURTAIN WALL)
E1-7005
JAMB F-ANCHOR (WINDOW WALL)
E1-7025

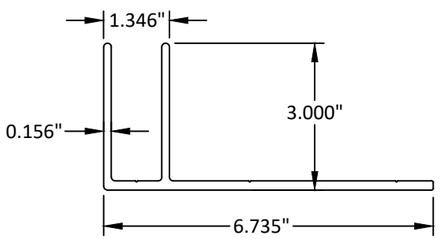

5 1/4" MULLION ANCHOR SLEEVE
E1-7006

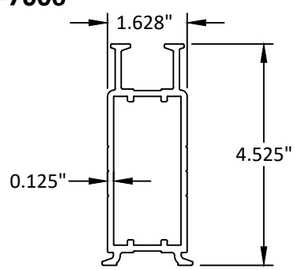

5 1/4" MULLION REINFORCEMENT CLIP
E1-7007

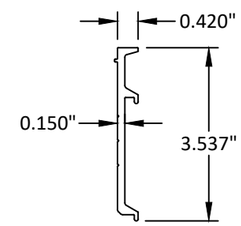

SSG SETTING BLOCK CHAIR (1 5/16" GLASS)
E1-7011

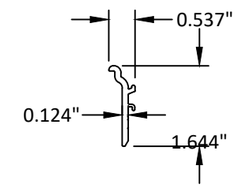

RH MULLION ANCHOR
E1-7014
LH MULLION ANCHOR
E1-7015 (E1-7014 MIRRORED)

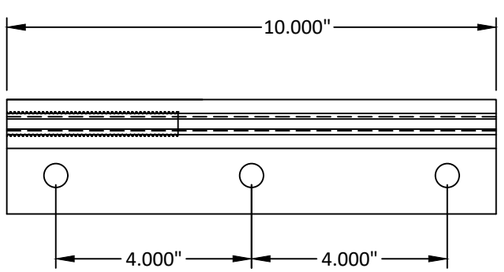

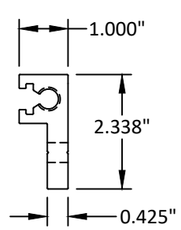

SETTING BLOCK CHAIR (1 5/16" GLASS)
E1-7010

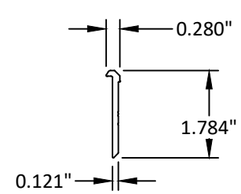

5 1/4" RH MULLION SLEEVE
E1-7021
5 1/4" LH MULLION SLEEVE
E1-7022 (E1-7021 MIRRORED)

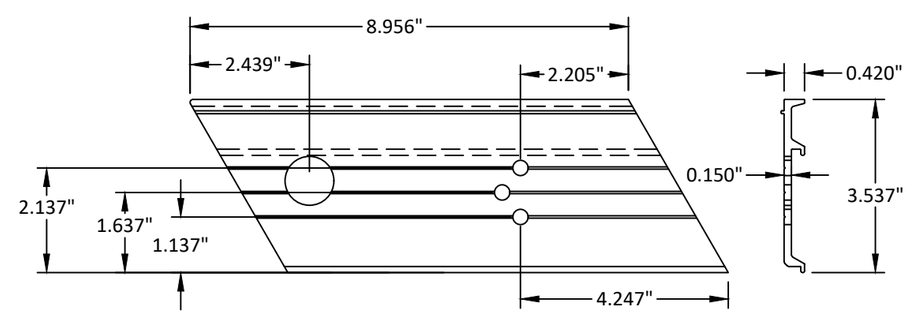

YKK AP AMERICA, Inc.
101 MARIETTA STREET NW, SUITE 2100
MIAMI, FL 33132
PH: (478)277-1955 FAX: (678)838-6001

TITLE: YUW 750 XTH UNITIZED WALL SYSTEM (HVHZ) (S.M.I.) COMPONENTS (3)

PREPARED BY: BUILDING DROPS, INC.
1900 NE MIAMI COURT, STE. 2-15
MIAMI, FL 33132
PH: (954)399-8478
FAX: (954)744.4738
WEB: www.buildingdrops.com

REMARKS	BY	DATE
2026 FBC UPDATE	SH	07.24.26

THE INSTALLATION DETAILS DESCRIBED HEREIN ARE GENERIC AND MAY NOT REFLECT ACTUAL CONDITIONS FOR A SPECIFIC SITE. IF SITE CONDITIONS CAUSE INSTALLATION TO DEVIATE FROM THE REQUIREMENTS DETAILED HEREIN, A LICENSED ENGINEER OR ARCHITECT SHALL PREPARE SITE SPECIFIC DOCUMENTS FOR USE WITH THIS DOCUMENT.

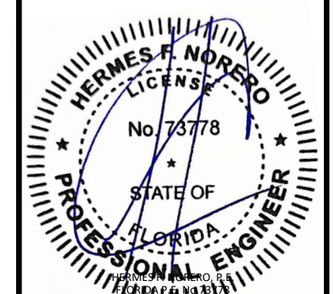

HERMES F. NORERO, P.E.
FLORIDA P.E. No. 73778
BUILDING DROPS, INC
1900 NE MIAMI COURT, STE. 2-15
MIAMI, FL 33132
FBPE CERT. OF AUTHORIZATION No. 29578

FL #: FL16668

DATE: 10.30.13

DWG. BY: MSS | CHK. BY: HFN

SCALE: NTS

DWG. #: YKK023

SHEET: 24 OF 26 | REV. A

c:\users\sebastianherreros\desktop\ykk 2026 cc\fl16668\ykk023.dwg

90 DEG INSIDE CORNER ANCHOR ASSEMBLY
E1-7028

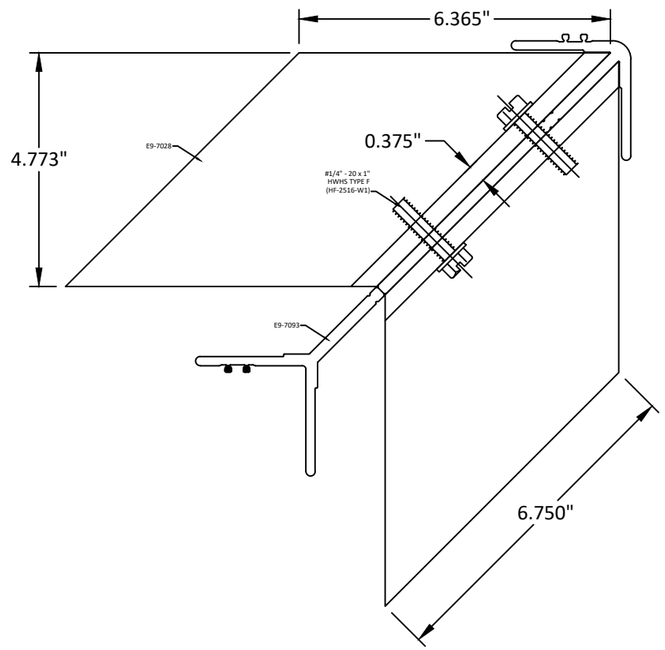

90 DEG OUTSIDE CORNER ANCHOR
E1-7029

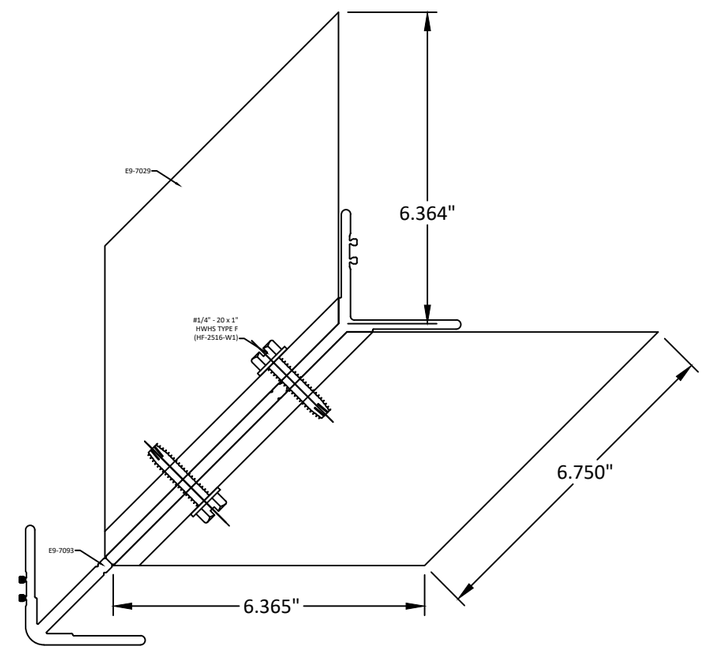

90 DEG. OUTSIDE CORNER MULLION ANCHOR
E1-7032

90 DEG. OUTSIDE CORNER LH MULLION ANCHOR
E1-7033 (E1-7032 MIRRORED)

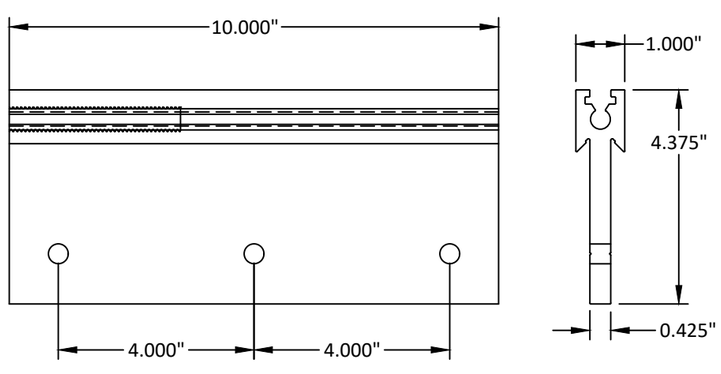

90 DEG. INSIDE CORNER LH MULLION ANCHOR
E1-7034

90 DEG. INSIDE CORNER LH MULLION ANCHOR
E1-7035 (E1-7034 MIRRORED)

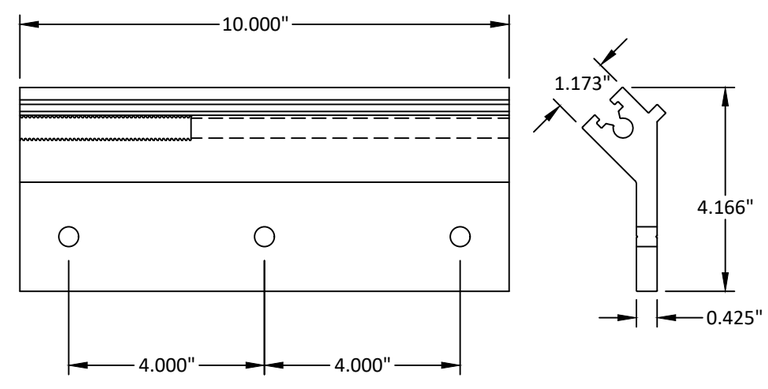

YKK AP AMERICA, Inc.
101 MARIETTA STREET NW, SUITE 2100
MIAMI, FL 33132
PH: (478)277-1955 FAX: (678)838-6001

TITLE: YUW 750 XTH UNITIZED WALL SYSTEM (HVHZ) (S.M.I.) COMPONENTS (4)

PREPARED BY: BUILDING DROPS, INC.
1900 NE MIAMI COURT, STE. 2-15
MIAMI, FL 33132
PH: (954)399-8478
FAX: (954)744.4738
WEB: www.buildingdrops.com

REMARKS	BY	DATE
2026 FBC UPDATE	SH	07.24.26

THE INSTALLATION DETAILS DESCRIBED HEREIN ARE GENERIC AND MAY NOT REFLECT ACTUAL CONDITIONS FOR A SPECIFIC SITE. IF SITE CONDITIONS CAUSE INSTALLATION TO DEVIATE FROM THE REQUIREMENTS DETAILED HEREIN, A LICENSED ENGINEER OR ARCHITECT SHALL PREPARE SITE SPECIFIC DOCUMENTS FOR USE WITH THIS DOCUMENT.

HERMES F. NORERO LICENSE No. 73778 STATE OF FLORIDA PROFESSIONAL ENGINEER

HERMES F. NORERO, P.E.
FLORIDA LIC. No. 73778
BUILDING DROPS, INC
1900 NE MIAMI COURT, STE. 2-15
MIAMI, FL 33132
FBPE CERT. OF AUTHORIZATION No. 29578

FL #: FL16668

DATE: 10.30.13

DWG. BY: MSS | CHK. BY: HFN

SCALE: NTS

DWG. #: YKK023

SHEET: 25 OF 26 | REV. A

7/24/2026 12:37 PM
c:\users\sebastianherreros\desktop\ykk 2026 cc\fl16668\ykk023.dwg

5 1/4" RH CORNER MULLION SPLICE SLEEVE
E1-7048
5 1/4" LH CORNER MULLION SPLICE SLEEVE
E1-7049 (E1-7048 MIRRORED)

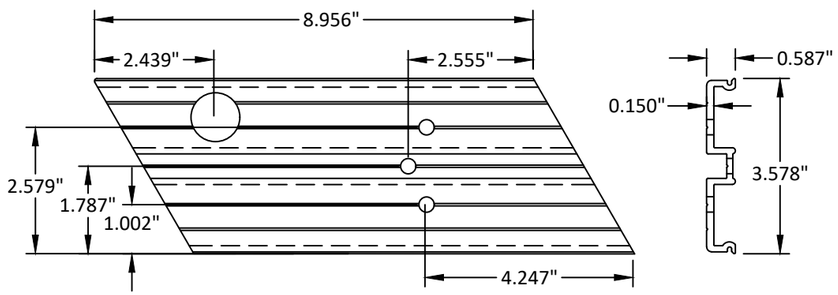

CORNER MULLION CLIP
E1-7050

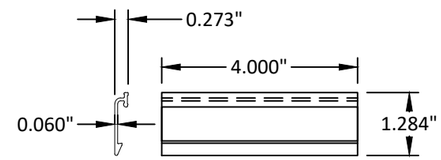

HORIZONTAL SSG SETTING BLOCK CHAIR
E1-7067

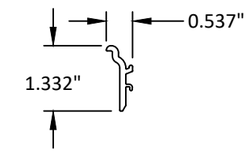

JAMB STACK JOINT ANGLE
E1-7081

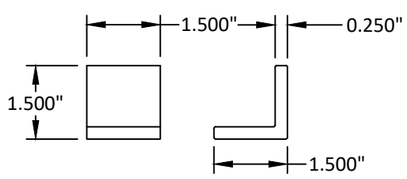

BRACKET SLEEVE
E1-7092

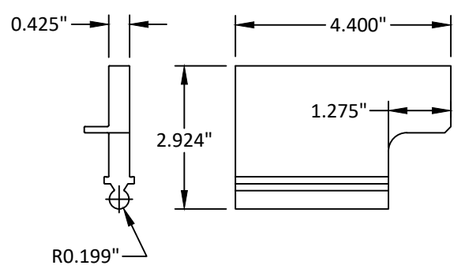

YKK AP AMERICA, Inc.
101 MARIETTA STREET NW, SUITE 2100
MIAMI, FL 33132
PH: (478)277-1955 FAX: (678)838-6001

TITLE: YUW 750 XTH UNITIZED WALL SYSTEM (HVHZ) (S.M.I.) COMPONENTS (5)

PREPARED BY: BUILDING DROPS, INC.
1900 NE MIAMI COURT, STE. 2-15
MIAMI, FL 33132
PH: (954)399-8478
FAX: (954)744.4738
WEB: www.buildingdrops.com

REMARKS	BY	DATE
2026 FBC UPDATE	SH	07.24.26

THE INSTALLATION DETAILS DESCRIBED HEREIN ARE GENERIC AND MAY NOT REFLECT ACTUAL CONDITIONS FOR A SPECIFIC SITE. IF SITE CONDITIONS CAUSE INSTALLATION TO DEVIATE FROM THE REQUIREMENTS DETAILED HEREIN, A LICENSED ENGINEER OR ARCHITECT SHALL PREPARE SITE SPECIFIC DOCUMENTS FOR USE WITH THIS DOCUMENT.

HERMES F. NORERO LICENSE No. 73778 STATE OF FLORIDA PROFESSIONAL ENGINEER

HERMES F. NORERO, P.E.
FLORIDA P.E. No. 73778
BUILDING DROPS, INC
1900 NE MIAMI COURT, STE. 2-15
MIAMI, FL 33132
FBPE CERT. OF AUTHORIZATION No. 29578

FL #: FL16668

DATE: 10.30.13

DWG. BY: MSS

CHK. BY: HFN

SCALE: NTS

DWG. #: YKK023

SHEET: 26 OF 26

REV. A

7/24/2026 12:37 PM
c:\users\sebastianherreros\desktop\ykk 2026 cc\fl16668\ykk023.dwg